Caratteristiche Tecniche

GPX 2018

Technical Characteristics

Pump Pompa	Pressure Pressione		Volume Portata				RPM giri/min		Power Potenza			
			l/min		GPM				HP		kW	
	bar	PSI	50 Hz	60 Hz	50 Hz	60 Hz	50 Hz	60 Hz	50 Hz	60 Hz	50 Hz	60 Hz
GPX2560S	600	8700	25	30	6.61	7.93	1000	1200	38.8	46.6	28.5	31.0
GPX3060S	600	8700	30	36	7.93	9.51	1000	1200	44.9	53.9	33.1	39.7

NESINPER | Distribucion y gestion tecnica Peru-Europa
Hidrolavadoras Nesinper S.A.C.
Deyvi Medrano Q. | Gestion tecnico-comercial
WhatsApp PE: +51 998 262 061 | dmedrano@nesinper.com

info@nesinper.com | www.nesinper.com

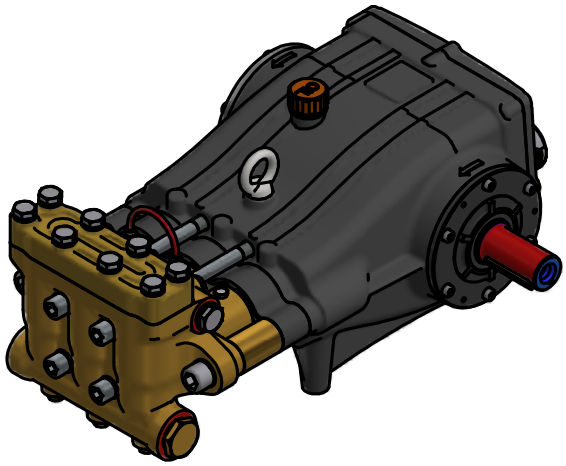

Dimensioni d'ingombro

Overall dimensions

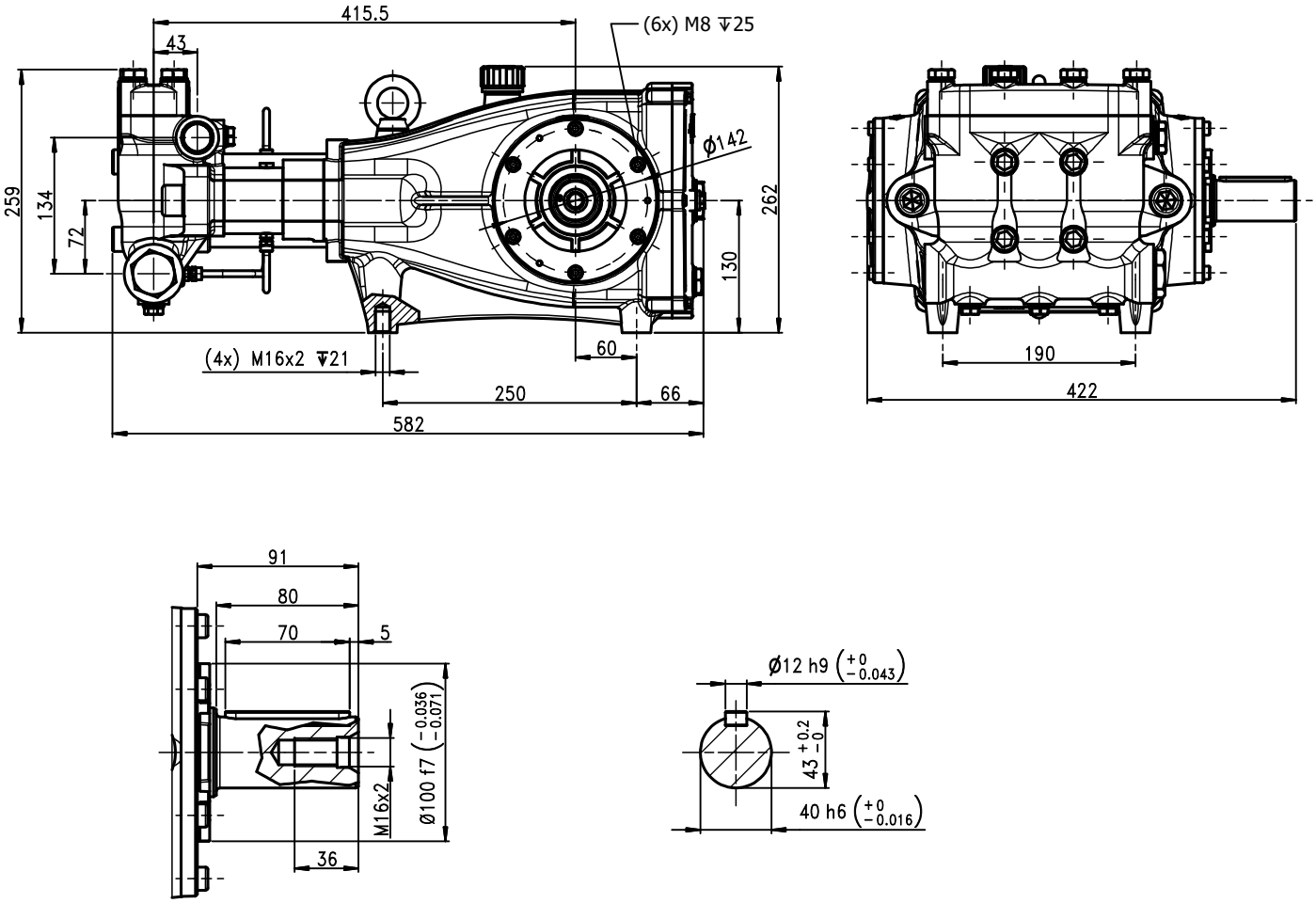

Lubrificazione: Olio SAE 10W-40
Capacità: 3,5 Litri
Peso pompa: 70 Kg

Rev. 5 - 01-21

Lubrication: SAE 10W-40 Oil
Capacity: 3,5 Litres
Weight: 70 Kg

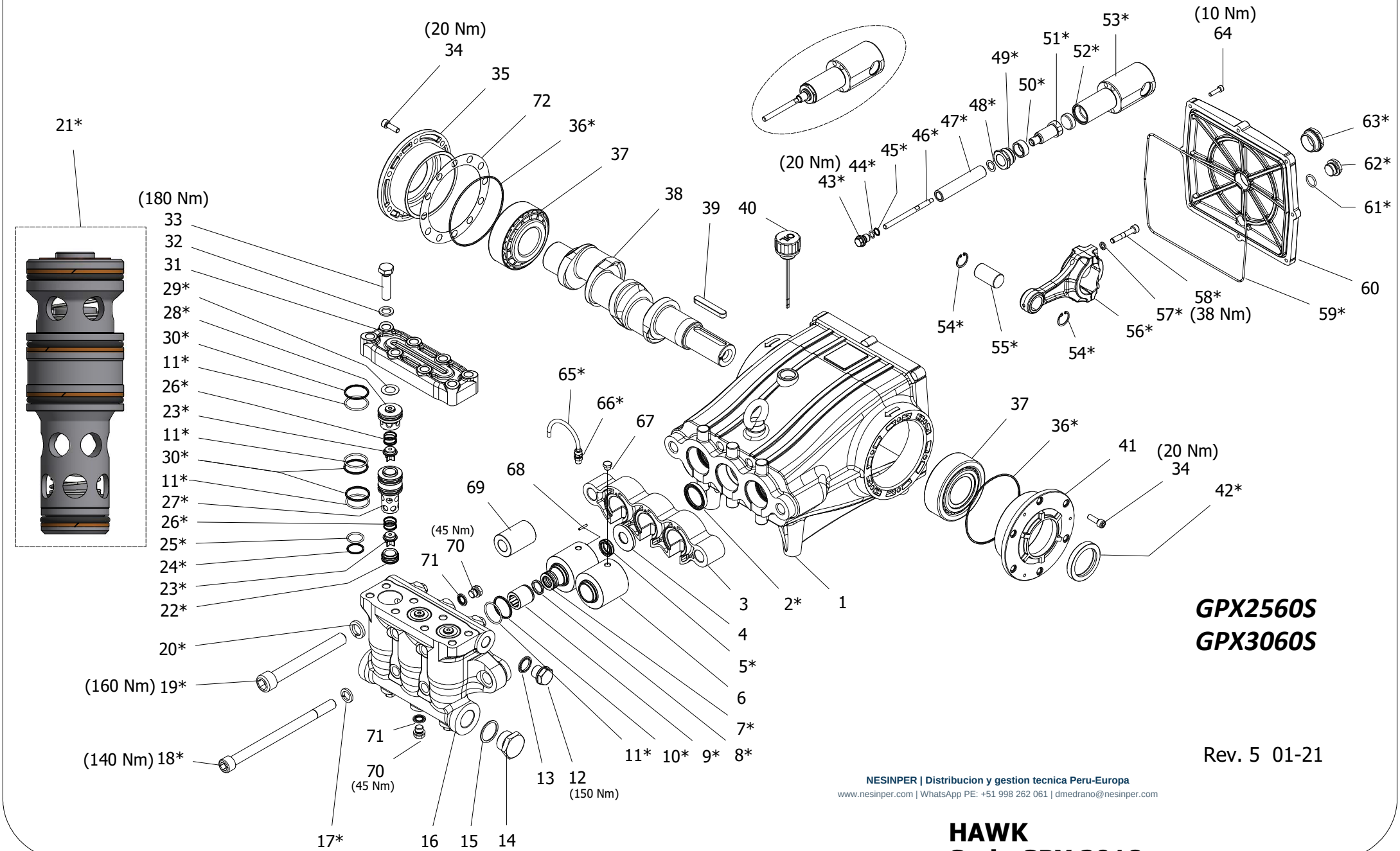

GPX2560S
GPX3060S

Rev. 5 01-21

NESINPER | Distribucion y gestion tecnica Peru-Europa
www.nesinper.com | WhatsApp PE: +51 998 262 061 | dmedrano@nesinper.com

HAWK
Serie GPX 2018
GPX 2018 Series

GPX SERIES 2018

ORDINARY MAINTENANCE KIT / KIT MANUTENZIONE ORDINARIA

KIT	*Item* Pos.	*Part Number* Codice	*Description*	Descrizione	*Q.TY by Pump* Q.TÀ per Pompa	*GPX2560S*	*GPX3060S*
A	5- 7- 8- 9- 10- 11	1.905-626.0	*PISTON SEAL PACKING Ø20*	GUARNIZIONI PISTONE Ø20	1	•	•
B	21 (11- 22- 23 24- 25- 26- 27 28- 29- 30)	1.905-627.0	*VALVE*	VALVOLA	1	•	•

EXTRAORDINARY MAINTENANCE KIT / KIT MANUTENZIONE STRAORDINARIA

KIT	*Item* Pos.	*Part Number* Codice	*Description*	Descrizione	*Q.TY by Pump* Q.TÀ per Pompa	*GPX2560S*	*GPX3060S*
C	43- 44- 45 47- 48	1.905-628.0	*PLUNGER Ø20*	PISTONE Ø20	3	•	•
D	36- 42- 59- 61 62- 63	1.904-474.0	*KIT CRANCKASE SEALS*	KIT TENUTE CARTER	1	•	•
E	17- 18- 19- 20	1.904-472.0	*MANIFOLD SCREWS*	VITI TESTATA	1	•	•
F	43- 44- 45- 46 48- 49- 50- 51 52- 53- 54- 55 56- 57- 58	1.905-629.0	*PLUNGER ROD-CONNECTING ROD*	ASTA PISTONE-BIELLA	3	•	•
G	65- 66	1.904-477.0	*COMPLETE CIRCULATION PIPES*	TUBI RICIRCOLO	1	•	•
I	2	1.904-478.0	*PLUNGER OIL SEALS*	TENUTE OLIO ASTA PISTONE	1	•	•

"Q.TY per pump" => Necessary quantity to repair one pump
"Q.TA' per pompa" => Quantità necessaria per riparare una pompa

NESINPER | Distribucion y gestion tecnica Peru-Europa | www.nesinper.com | +51 998 262 061

TOOL KIT

Part Number Codice	Description	Descrizione	Q.TY by Pump Q.TÀ per Pompa	GPX2560S	GPX3060S
1.905-635.0	TOOL-KIT	TOOL-KIT	1	•	•
1.905-636.0	OIL SEAL EXTRACTOR TOOL-KIT	TOOL-KIT ESTR. PARAOLIO	1		

IMPORTANT **IMPORTANTE**

* ***Part available ONLY in kit***
Disponibile SOLO in kit

(…) **Parts pre-assembled**
Parti pre-assemblate

NESINPER | Distribucion y gestion tecnica Peru-Europa | www.nesinper.com | +51 998 262 061

PARTS LIST LISTA PARTI

Item Pos	*Part Number* Codice	*Description*	Descrizione	*KIT*	*Q.TY* Q.TÀ	*GPX2560S*	*GPX3060S*
1	9.850-372.0	*CRANCKCASE*	CARTER		1		
2*		OIL SEAL	ANELLO RADIALE	I	3		
3	9.850-361.0	*SPACER*	DISTANZIALE CARTER		1		
4	9.853-295.0	*SUPPORT RING Ø20*	PRESSORE Ø20		3		
5*		*"U" LP SEAL Ø20*	TENUTA BASSA PRESSIONE Ø20	A	3		
6	9.850-494.0	*INTERMEDIATE RING Ø20*	DIFFUSORE Ø20		3		
7*		*"U" HP SEAL Ø20*	TENUTA ALTA PRESSIONE Ø20	A	3		
8*		*SCRAPER Ø20*	RASCHIATORE PISTONE Ø20	A	3		
9*		*BUSH GUIDE Ø20*	BOCCOLA GUIDA Ø20	A	3		
10*		*BACK RING OR3137*	ANELLO ANTIESTR. OR*3137*	A	3		
11*		*O-RING 3137 – NBR90*	O-RING 3137 – NBR90	A	12		
12	9.851-328.0	*STAINLESS STEEL PLUG G1/2"*	TAPPO G1/2" INOX		1		
13	9.851-192.0	*BONDED SEAL G1/2"*	BONDED SEAL G ½"		1		
14	9.851-331.0	*PLUG G1"*	TAPPO G1"		1		
15	9.850-752.0	*COPPER WASHER G1"*	GUARNIZIONE G1"		1		
16	9.851-409.0	*MANIFOLD*	TESTATA		1		
17*		*WASHER M16*	ROSETTA M16	E	4		
18*		*SCREW M16x240*	VITE TCEI M16x240	E	4		
19*		*SCREW M20x170*	VITE TCEI M20x170	E	2	•	•
20*		*SPRING WASHER M20*	ROSETTA ELASTICA M20	E	2		
21*		*VALVE ASSEMBLY*	PREMONATATO VALVOLA	B	6		
22*		*VALVE SEAT*	SEDE VALVOLA	B	3		
23*		*VALVE PLATE*	PIATTELLO VALVOLA	B	6		
24*		*BACK RING OR3093*	ANELLO ANTIESTR. OR3093	B	3		
25*		*O-RING 3093 – NBR70*	O-RING 3093 – NBR70	B	6		
26*		*SPRING*	MOLLA	B	6		
27*		*VALVE CAGE*	GABBIA VALVOLA	B	6		
28*		*VALVE CAGE*	GABBIA VALVOLA	B	6		
29*		*VALVE SPACER*	DISTANZIALE VALVOLA	B	6		
30*		*BACK RING OR3137*	ANELLO ANTIESTR. OR*3137*	B	9		
31	9.853-647.0	*MANIFOLD COVER*	COPERCHIO TESTATA		1		
32	9.853-652.0	*WASHER M14*	ROSETTA M14		8		
33	9.853-651.0	*SCREW M14x55*	VITE TE M14x55		8		
34	9.851-468.0	*SCREW M8x25*	VITE TCEI M8x25		12		
35	9.850-646.0	*CLOSED HOUSING*	FLANGIA CHIUSA		1		
36		*O-RING 3475 – NBR70*	O-RING 3475 – NBR70	D	2		
37	9.850-353.0	*BEARING*	CUSCINETTO		2		

NESINPER | Distribucion y gestion tecnica Peru-Europa | www.nesinper.com | +51 998 262 061

Item Pos	Part Number Codice	Description	Descrizione	Kit	Q.TY Q.TÀ	GPX2560S	GPX3060S
38	9.853-654.0	*CRANKSHAFT "H"*	ALBERO "H"		1		•
	9.853-655.0	*CRANKSHAFT "I"*	ALBERO "I"		1	•	
39	9.850-449.0	*CRANKSHAFT KEY*	CHIAVETTA		1	•	•
40	9.851-284.0	*OIL DIP STICK G3/4*	TAPPO SFIATO OLIO G3/4		1		
41	9.850-645.0	*BEARING HOUSING*	FLANGIA APERTA		1		
42*		*OIL SEAL*	ANELLO RADIALE	D	1		
43*		*PLUNGER NUT*	DADO PISTONE	C – F	3		
44*		*O-RING 2037 – NBR70*	O-RING 2037 – NBR70	C – F	3		
45*		*BACK RING OR2037*	ANELLO ANTIESTR. OR2037	C – F	3		
46*		*PLUNGER SCREW*	TIRANTE PISTONE	F	3		
47*		*PLUGER Ø20*	PISTONE Ø20	C	3		
48*		*PLUGER WASHER*	ROSETTA PISTONE	C – F	3		
49*		*NUT*	DADO DI UNIONE	F	3		
50*		*ELASTIC BOWL*	BOCCOLA ELASTICO	F	3		
51*		*PLUNGER SPACER*	DISTANZIALE ASTA	F	3		
52*		*PRESSURE DISC*	DISCO DI PRESSIONE	F	3		
53*		*PLUNGER ROD*	ASTA PATTINO	F	3		
54*		*SEEGER*	ANELLO SEEGER	F	6		
55*		*CONNECTING ROD PIN*	SPINOTTO	F	3		
56*		*CONNECTING ROD*	BIELLA	F	3		
57*		*WASHER M8*	ROSETTA ELASTICA M8	F	6		
58*		*SCREW M8x50*	VITE TCEI M8x50	F	6		
59*		*O-RING Ø2,62x255 - NBR90*	O-RING Ø2,62x255 - NBR90	D	1		
60	9.850-395.0	*CRANCKCASE COVER*	COPERCHIO CARTER		1		
61*		*O-RING 3068 - NBR70*	O-RING 3068 - NBR70	D	1		
62*		*PLUG G ½"*	TAPPO G1/2"	D	1		
63*		*SIGHT GLASS G1"*	SPIA LIVELLO G1"	D	1		
64	9.851-480.0	*SCREW M6x22*	VITE TCEI M6x22		8		
65*		*RED RILSAN PIPE 6/4*	TUBO RILSAN 6/4 ROSSO	G	3		
66*		*FITTING G1/8-6/4*	RACCORDO G1/8-6/4	G	6		
67	9.851-353.0	*PLUG G1/8*	TAPPO G1/8		1		
68	9.851-256.0	*PIN*	SPINA CILINDRICA		3		
69	9.853-834.0	*CYLINDER HEAD SPACER*	DISTANZIALE TESTATA		2		
70	9.851-305.0	*PLUG G1/4*	TAPPO G1/4		6		
71	9.853-581.0	BONDED SEAL G1/4	BONDED SEAL G1/4		6		
72	9.850-549.0	*SHIM*	DISTANZIALE FLANGIA		1		