Caratteristiche Tecniche

GXT 2016

Technical Characteristics

Pump Pompa	Pressure Pressione		Volume Portata				RPM giri/min		Power Potenza			
			l/min		GPM				HP		kW	
	bar	PSI	50 Hz	60 Hz	50 Hz	60 Hz	50 Hz	60 Hz	50 Hz	60 Hz	50 Hz	60 Hz
GXT6028S	280	4060	60	72	15,7	18,8	1000	1200	43,0	51,6	31,7	38,0
GXT8020S	200	2900	80	96	20,9	25,1	1000	1200	41,1	49,3	30,2	36,2
GXT1020S	200	2900	100	120	25,8	31	1000	1200	51,3	64,6	37,7	45,4
GXT1215S	150	2175	120	144	31,3	37,6	1000	1200	47,0	56,4	34,6	41,5
GXT1515S	150	2175	150	180	39,2	47,0	1000	1200	59,0	70,8	43,4	52,1
GXT1713S	130	1885	170	204	45,0	54,0	1000	1200	56,8	68,1	41,8	50,2

NESINPER | Distribucion y gestion tecnica Peru-Europa
Hidrolavadoras Nesinper S.A.C.
Deyvi Medrano Q. | Gestion tecnico-comercial
WhatsApp PE: +51 998 262 061 | dmedrano@nesinper.com

info@nesinper.com | www.nesinper.com

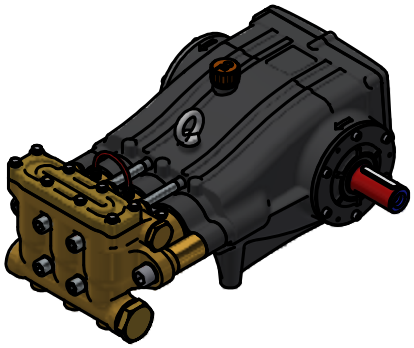

Dimensioni d'ingombro

Overall dimensions

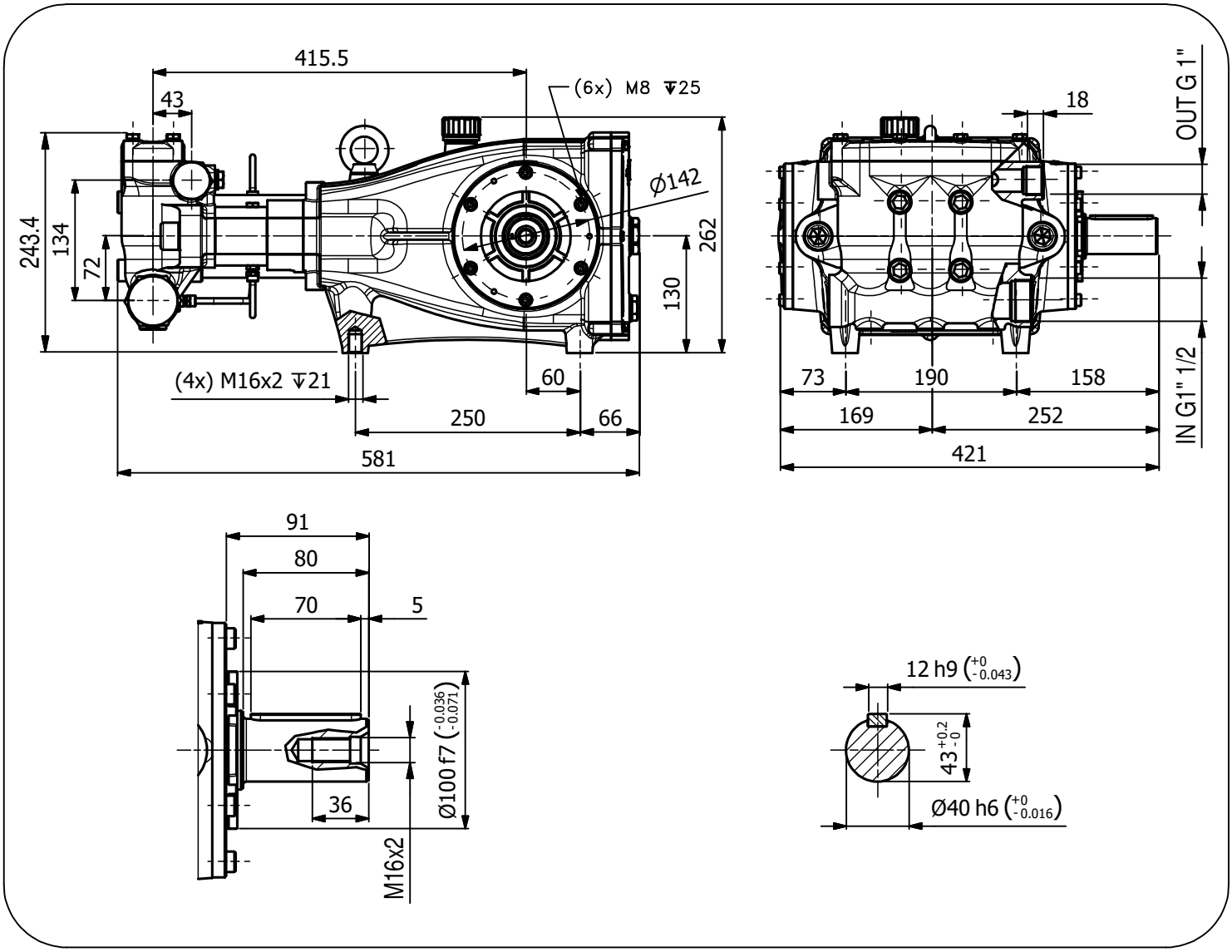

Lubrificazione: Olio SAE 10W-40
Capacità: 5,5 Litri
Peso pompa: 67,5 Kg

Rev. 7 - 04-24

Lubrication: SAE 10W-4 0 Oil
Capacity: 5,5 Litres
Weight: 67,5 Kg

(*) disponibili solo in kit
available only in kit

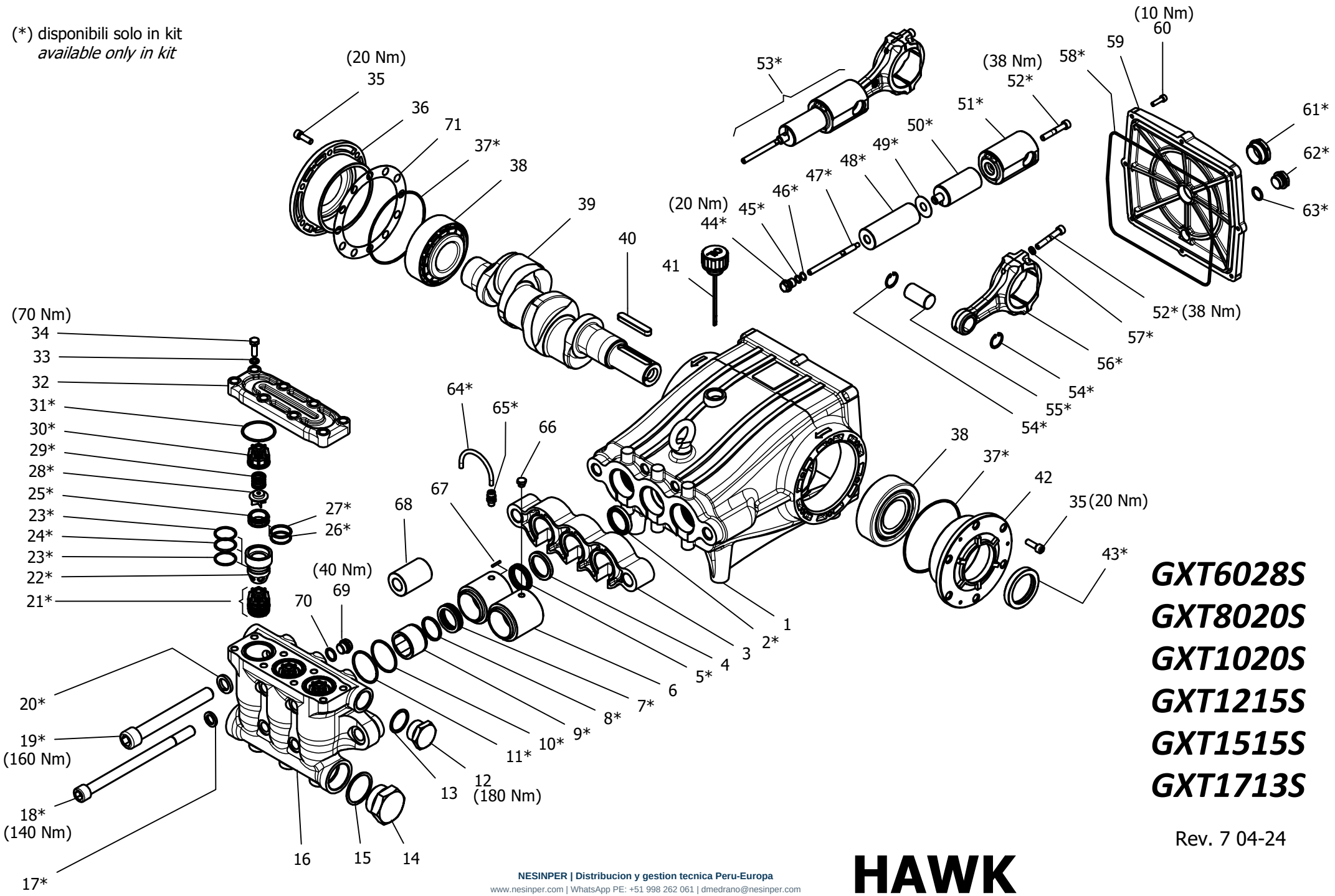

GXT6028S
GXT8020S
GXT1020S
GXT1215S
GXT1515S
GXT1713S

Rev. 7 04-24

NESINPER | Distribucion y gestion tecnica Peru-Europa
www.nesinper.com | WhatsApp PE: +51 998 262 061 | dmedrano@nesinper.com

HAWK
serie GXT 2016

GXT SERIES 2016

MAINTENANCE KIT / KIT MANUTENZIONE

KIT	*Item* - Pos	*Part Number* - Codice	*Description*	Descrizione	*Q.TY per pump* - Q.TÀ per pompa	*GXT6028S*	*GXT8020S*	*GXT1020S*	*GXT1215S*	*GXT1515S*	*GXT1713S*
A	5- 7- 8- 9- 10- 11	1.904-476.0	*PISTON SEAL PACKING Ø36*	GUARNIZIONI PISTONE Ø36	1			•	•	•	•
		9.853-464.0	*PISTON SEAL PACKING Ø30*	GUARNIZIONI PISTONE Ø30	1	•	•				
B	44- 45- 46- 48- 49	1.904-473.0	*PLUNGER Ø36*	PISTONE Ø36	3			•	•	•	•
		9.853-465.0	*PLUNGER Ø30*	PISTONE Ø30	3	•	•				
C	37- 43- 58- 61 62- 63	1.904-474.0	*KIT CRANCKASE SEALS*	KIT TENUTE CARTER	1	•	•	•	•	•	•
D	17- 18- 19- 20	1.904-472.0	*MANIFOLD SCREWS*	VITI TESTATA	1						
E	44- 45- 46- 49 52- 53- 54- 55 56- 57	1.904-475.0	*PLUNGER ROD-CONNECTING ROD*	ASTA PISTONE-BIELLA	3	•	•	•	•		
		1.904-879.0	*PLUNGER ROD-CONNECTING ROD*	ASTA PISTONE-BIELLA	3					•	•
F	64- 65	1.904-477.0	*COMPLETE CIRCULATION PIPES*	TUBI RICIRCOLO	1	•	•	•	•	•	•
G	21 *(25- 26- 27 28- 29- 30)* 22 23- 24- 31	1.904-470.0	*COMPLETE VALVE*	VALVOLE COMPLETE	1						
H	21 *(26-27-28-29-30-31)* 23- 24- 31	1.904-471.0	*VALVE*	VALVE	1						
I	2	1.904-478.0	*PLUNGER OIL SEALS*	TENUTE OLIO ASTA PISTONE	1						

"Q.TY per pump" => Necessary quantity to repair one pump
"Q.TA' per pompa" => Quantità necessaria per riparare una pompa

IMPORTANT **IMPORTANTE**

* ***Part available ONLY in kit***
Disponibile SOLO in kit

(…) **Parts pre-assembled**
Parti pre-assemblate

NESINPER | Distribucion y gestion tecnica Peru-Europa | www.nesinper.com | +51 998 262 061

PARTS LIST LISTA PARTI

Item Pos	Part Number Codice	Description	Descrizione	Kit	Q.TY Q.TÀ	GXT6028S	GXT8020S	GXT1020S	GXT1215S	GXT1515S	GXT1713S
1	9.853-880.0	CRANCKCASE	CARTER		1						
2*		OIL SEAL	ANELLO RADIALE	I	3	•	•	•	•	•	•
3	9.850-361.0	SPACER	DISTANZIALE CARTER		1						
4	9.851-930.0	SUPPORT RING Ø36	PRESSORE Ø36		3			•	•	•	•
	9.853-391.0	SUPPORT RING Ø30	PRESSORE Ø30		3	•	•				
5*		"U" LP SEAL Ø36	TENUTA BASSA PRESSIONE Ø36	A	3			•	•	•	•
		"U" LP SEAL Ø30	TENUTA BASSA PRESSIONE Ø30	A	3	•	•				
6	9.850-496.0	INTERMEDIATE RING Ø36	DIFFUSORE Ø36		3			•	•	•	•
	9.850-495.0	INTERMEDIATE RING Ø30	DIFFUSORE Ø30		3	•	•				
7*		"U" HP SEAL Ø36	TENUTA ALTA PRESSIONE Ø36	A	3			•	•	•	•
		"U" HP SEAL Ø30	TENUTA ALTA PRESSIONE Ø30	A	3	•	•				
8*		SCRAPER Ø36	RASCHIATORE PISTONE Ø36	A	3			•	•	•	•
		SCRAPER Ø30	RASCHIATORE PISTONE Ø30	A	3	•	•				
9*		BUSH GUIDE Ø36	BOCCOLA GUIDA Ø36	A	3			•	•	•	•
		BUSH GUIDE Ø30	BOCCOLA GUIDA Ø30	A	3	•	•				
10*		BACK RING OR3200	ANELLO ANTIESTR. OR3200	A	3						
11*		O-RING 3200 – NBR90	O-RING 3200 – NBR90	A	3						
12	9.851-331.0	PLUG G1"	TAPPO G1"		1						
13	9.850-752.0	COPPER WASHER G1"	GUARNIZIONE G1"		1						
14	9.851-360.0	PLUG G1" 1/2	TAPPO G1" 1/2		1						
15	9.850-753.0	COPPER WASHER G1" ½	GUARNIZIONE G1" 1/2		1						
16	9.851-411.0	MANIFOLD	TESTATA		1						
17*		WASHER M16	ROSETTA M16	D	4						
18*		SCREW M16x240	VITE TCEI M16x240	D	4						
19*		SCREW M20x170	VITE TCEI M20x170	D	2						
20*		WASHER M20	ROSETTA M20	D	2						
21*		VALVE ASSEMBLY	PREMONATATO VALVOLA	G - H	6	•	•	•	•	•	•
22*		VALVE SPACER	DISTANZIALE VALVOLA	G	3						
23*		BACK RING OR3118	ANELLO ANTIESTR. OR3118	G - H	6						
24*		O-RING 3118 – NBR90	O-RING 3118 – NBR90	G - H	3						
25*		VALVE SEAT	SEDE VALVOLA	G - H	6						
26*		BACK RING OR3112	ANELLO ANTIESTR. OR3112	G - H	6						
27*		O-RING 3112 – NBR90	O-RING 3112 – NBR90	G - H	6						
28*		VALVE PLATE	PIATTELLO VALVOLA	G - H	6						
29*		SPRING	MOLLA	G - H	6						
30*		VALVE CAGE	GABBIA VALVOLA	G - H	6						
31*		O-RING 3193 – NBR90	O-RING 3193 – NBR90	G - H	3						

NESINPER | Distribucion y gestion tecnica Peru-Europa | www.nesinper.com | +51 998 262 061

Item Pos	Part Number Codice	Description	Descrizione	Kit	Q.TY Q.TÀ	GXT6028S	GXT8020S	GXT1020S	GXT1215S	GXT1515S	GXT1713S
32	9.850-396.0	MANIFOLD COVER	COPERCHIO TESTATA		1						
33	9.851-140.0	WASHER M12	ROSETTA M12		8						
34	9.851-518.0	SCREW M12x40	VITE TE M12x40		8						
35	9.851-468.0	SCREW M8x25	VITE TCEI M8x25		12	•	•	•	•	•	•
36	9.850-646.0	CLOSED HOUSING	FLANGIA CHIUSA		1						
37*		O-RING 3475 – NBR70	O-RING 3475 – NBR70	C	2						
38	9.850-353.0	BEARING	CUSCINETTO		2						
39	9.853-844.0	CRANKSHAFT “1”	ALBERO "1"		1						•
	9.851-915.0	CRANKSHAFT “B”	ALBERO "B"		1			•			
	9.853-098.0	CRANKSHAFT “C”	ALBERO "C"		1	•					
	9.853-099.0	CRANKSHAFT “D”	ALBERO "D"		1		•				
	9.853-097.0	CRANKSHAFT “E”	ALBERO "E"		1				•		
	9.853-845.0	CRANKSHAFT “3”	ALBERO "3"		1					•	
40	9.850-449.0	CRANKSHAFT KEY	CHIAVETTA		1						
41	9.851-284.0	OIL DIP STICK G3/4	TAPPO SFIATO OLIO G3/4		1						
42	9.850-645.0	BEARING HOUSING	FLANGIA APERTA		1						
43*		OIL SEAL	ANELLO RADIALE	C	1						
44*		PLUNGER NUT	DADO PISTONE	B - E	3	•	•	•	•	•	•
45*		O-RING 2037 – NBR70	O-RING 2037 – NBR70	B - E	3						
46*		BACK RING OR2037	ANELLO ANTIESTR. OR2037	B - E	3						
47*		PLUNGER SCREW	TIRANTE PISTONE	E	3						
48*		PLUGER Ø36	PISTONE Ø36	B	3			•	•	•	•
		PLUGER Ø30	PISTONE Ø30	B	3	•	•				
49*		PLUGER WASHER	ROSETTA PISTONE	B - E	3						
50*		PLUNGER ROD SPACER	DISTANZIALE ASTA	E	3						
51*		PLUNGER ROD	ASTA PATTINO	E	3						
52*		SCREW M8x50	VITE TCEI M8x50	E	9	•	•	•	•	•	•
53*		ASSEMBLY PLUNGER ROD	PREMONATATO ASTA PISTONE	E	3						
54*		SEEGER	ANELLO SEEGER	E	6						
55*		CONNECTING ROD PIN	SPINOTTO	E	3						
56*		CONNECTING ROD	BIELLA	E	3	•	•	•	•		
		CONNECTING ROD	BIELLA	E	3					•	•
57*		WASHER M8	ROSETTA ELASTICA M8	E	6						
58*		O-RING Ø2,62x255 - NBR90	O-RING Ø2,62x255 - NBR90	C	1						
59	9.850-395.0	CRANCKCASE COVER	COPERCHIO CARTER		1						
60	9.851-480.0	SCREW M6x22	VITE TCEI M6x22		8	•	•	•	•	•	•
61*		SIGHT GLASS G1”	SPIA LIVELLO G1”	C	1						
62*		PLUG G1/2	TAPPO G1/2	C	1						
63*		O-RING 3068 - NBR70	O-RING 3068 - NBR70	C	1						

NESINPER | Distribucion y gestion tecnica Peru-Europa | www.nesinper.com | +51 998 262 061

Item Pos	Part Number Codice	Description	Descrizione	Kit	Q.TY Q.TÀ	GXT6028S	GXT8020S	GXT1020S	GXT1215S	GXT1515S	GXT1713S
64*		RED RILSAN PIPE 6/4	TUBO RILSAN 6/4 ROSSO	F	3	•	•	•	•	•	•
65*		FITTING G1/8-6/4	RACCORDO G1/8-6/4	F	6						
66	9.851-353.0	PLUG G1/8	TAPPO G1/8		1						
67	9.851-256.0	PIN	SPINA CILINDRICA		3						
68	9.853-834.0	CYLINDER HEAD SPACER	DISTANZIALE TESTATA		2						
69	9.851-303.0	PLUG G3/8	TAPPO G3/8		3						
70	9.850-747.0	COPPER WASHER G3/8	GUARNIZIONE RAME G3/8		3						
71	9.850-549.0	SHIM	DISTANZIALE FLANGIA		1						

NESINPER | Soporte tecnico y comercial

Hidrolavadoras Nesinper S.A.C.

Deyvi Medrano Q. | Gestion tecnico-comercial | dmedrano@nesinper.com

WhatsApp PE: +51 998 262 061

info@nesinper.com | www.nesinper.com

Gestion tecnica Peru-Europa