NESINPER | Distribucion y gestion tecnica Peru-Europa
Hidrolavadoras Nesinper S.A.C.
Deyvi Medrano Q. | Gestion tecnico-comercial
WhatsApp PE: +51 998 262 061 | dmedrano@nesinper.com

info@nesinper.com | www.nesinper.com

Pump Pompa	Pressure Pressione		Volume Portata		RPM giri/min	Power Potenza	
			l/min	GPM		HP	kW
	bar	PSI	50 Hz	50 Hz	50 Hz	50 Hz	50 Hz
HHP2750	500	7250	27	7.1	1450	35.5	26.1
HHP3650	500	7250	36	9.5	1450	46.9	34.5
HHP4150	500	7250	41	10.8	1450	53.7	39.5

Dimensioni d'ingombro — *Overall dimensions*

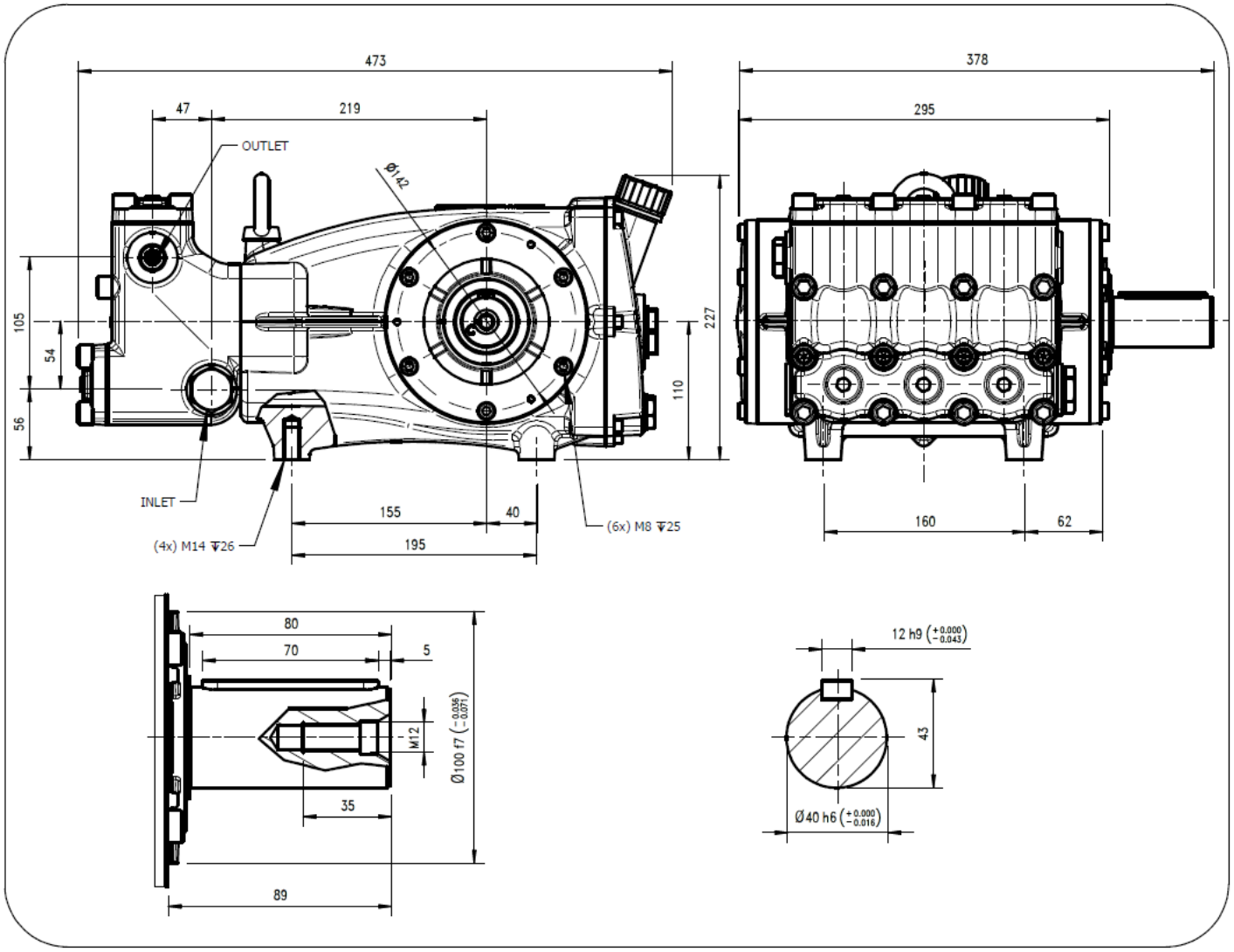

Lubrificazione: Olio SAE 10W40
Capacità: 3.5 Litri
Peso pompa: 51 kg

Lubrication: SAE 10W40 Oil
Capacity: 3.5 Litres
Weight: 51 kg

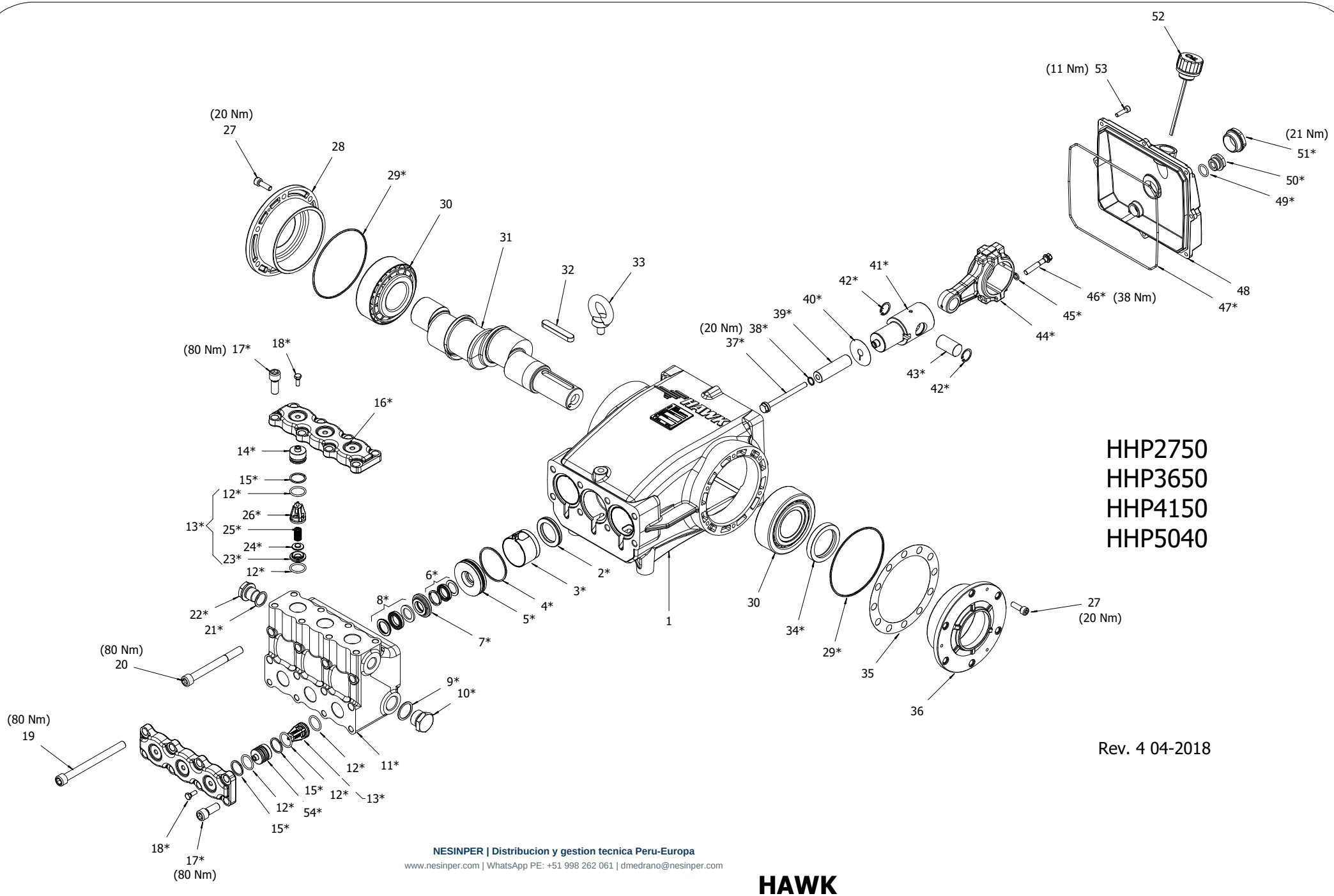

NESINPER | Distribucion y gestion tecnica Peru-Europa
www.nesinper.com | WhatsApp PE: +51 998 262 061 | dmedrano@nesinper.com

HAWK
Pompe HHP 1450 rpm serie 2011
HHP pumps 1450 rpm 2011 series

HHP 1450 RPM 2013 SERIES

ORDINARY MAINTENANCE KIT / KIT MANUTENZIONE ORDINARIA

KIT	*Item* Pos.	*Part Number* Codice	*Description*	Descrizione	*Q.TY by Pump* Q.TÀ per Pompa	*HHP2750R/L*	*HHP3650R/L*	*HHP4150R/L*
A	4- 6- 8	1.099-821.0	*PLUNGER SEALS DIA. 20 mm*	GUARNIZIONI PISTONE Ø20	1	•	•	•
B	12- 13 (23- 24 25- 26) 15	1.905-710.0	*COMPLETE VALVE*	VALVOLA COMPLETA	1			

EXTRAORDINARY MAINTENANCE KIT / KIT MANUTENZIONE STRAORDINARIA

KIT	*Item* Pos.	*Part Number* Codice	*Description*	Descrizione	*Q.TY by Pump* Q.TÀ per Pompa	*HHP2750R/L*	*HHP3650R/L*	*HHP4150R/L*
C	4- 5- 6- 7- 8	1.905-711.0	*COMPLETE SEALS PACKING DIA. 20 mm*	PACCO COMPLETO GUARNIZIONI PISTONE Ø20	1	•	•	•
D	37- 38- 39- 40	1.099-824.0	*PLUNGER DIA. 20 mm*	PISTONE Ø20	3			
E	3x (2- 3)	1.099-817.0	*PLUNGER OIL SEALS*	ANELLI TENUTA OLIO ASTA	1			
F	29- 34- 47- 49- 50 51- 52	1.905-706.0	*KIT CRANKCASE SEALS*	KIT TENUTE CARTER	1			
G	4- 5- 6- 7- 8- 9- 10 11- 12- 13 (23- 24 25- 26) 14- 15- 16 17- 18- 19- 20- 21- 22- 54	1.099-830.0	*COMPLETE MANIFOLD*	TESTATA COMPLETA	1			
H	37- 38- 40- 41- 42 43- 44- 45- 46	1.905-707.0	*CONNECTING ROD PLUNGER ROD ASSY*	PREMONTATO ASTA-BIELLA PISTONE	3			

"Q.TY by Pump" => Necessary quantity to repair one pump
"Q.TA' per Pompa" => Quantità necessaria per riparare una pompa

NESINPER | Distribucion y gestion tecnica Peru-Europa | www.nesinper.com | +51 998 262 061

TOOL KIT

Part Number **Codice**	***Description***	**Descrizione**	***Q.TY by Pump*** **Q.TÀ per Pompa**	***HHP2750R/L***	***HHP3650R/L***	***HHP4150R/L***
1.904-204.0	TOOL-KIT	TOOL-KIT	1	•	•	•

IMPORTANT **IMPORTANTE**

* ***Part available ONLY in kit***
Disponibile SOLO in kit

(…) **Parts pre-assembled**
Parti pre-assemblate

NESINPER | Distribucion y gestion tecnica Peru-Europa | www.nesinper.com | +51 998 262 061

PARTS LIST LISTA PARTI

Item Pos	Part Number Codice	Description	Descrizione	KIT	Q.TY Q.TÀ	HHP2750R/L	HHP3650R/L	HHP4150R/L
1	9.851-902.0	CRANKCASE	CARTER		1			
2*		PLUNGER OIL SEAL	ANELLO RADIALE	E	3			
3*		PLASTIC BUSHING	BOCCOLA CORTECO ASTE	E	3			
4*		"O" RING Ø2.62X56,82	"O" RING Ø2.62X56,82	A-C-G	3			
5*		PRESSURE RING 20 MM	PRESSORE "U" Ø20	C-G	3			
6*		"U" SEAL, Ø20X28 MM	ANELLO TENUTA "U" Ø20x28	A-C-G	3			
7*		INTERMED. RING 20MM	DIFFUSORE INTER. Ø20	C-G	3			
8*		"U" SEAL, Ø20X30 MM	ANELLO TENUTA "U" Ø20x30	A-C-G	3			
9*		COPPER WASHER	GUARNIZIONE RAME G 3/4	G	1			
10*		STAINLESS STEEL PLUG G 3/4	TAPPO G ¾ INOX	G	1			
11*		MANIFOLD HOUSING	TESTATA	G	1			
12*		"O" RING Ø2.62X22,22	"O" RING Ø2.62X22,22	B-G	15			
13*		VALVE ASSEMBLY	VALVOLA PREMONTATA	B-G	6			
14*		VALVE PLUG	TAPPO VALVOLA	G	3			
15*		BACK RING	ANELLO ANTIESTRUSIONE	G	9	•	•	•
16*		VALVES COVER	COPERCHIO VAM	G	2			
17*		VALVE COVER SCREW	VITE TCEI M12X30 UNI 5931	G	12			
18*		VALVE PLUG SCREW	VITE TE M6X16 UNI 5739	G	6			
19	9.851-471.0	MANIFOLD STUD BOLT	VITE TCEI M12X140 UNI 5931		4			
20	9.851-472.0	MANIFOLD STUD BOLT	VITE TCEI M12X120 UNI 5931		4			
21*		COPPER WASHER	GUARNIZIONE RAME G 1/2	G	4			
22*		STAINLESS STEEL PLUG G1/2	TAPPO G1/2 INOX	G	1			
23*		VALVE SEAT	SEDE VALVOLA	B-G	6			
24*		VALVE PLATE	PIATTELLO VALVOLA	B-G	6			
25*		VALVE SPRING	MOLLA VALVOLA	B-G	6			
26*		VALVE CAGE	GABBIA VALVOLA	B-G	6			
27	9.851-468.0	BEARING HOUSING SCREW	VITE TCEI M8X25 UNI 5931		12			
28	9.850-646.0	CLOSED BEARING SCREW	FLANGIA CHIUSA		1			
29*		"O" RING Ø2.62X120.32	"O" RING Ø2.62X120.32	F	2			
30	9.850-353.0	ROLLER BEARING	CUSCINETTO 32310 RULLI CONICI		2			
31	9.850-184.0	SINGLE–ENDED CRANCKSHAFT	ALBERO SINGOLA P.D.F		1	•		
	9.850-185.0	" " "	" " "		1		•	
	9.850-186.0	" " "	" " "		1			•
32	9.850-449.0	CRANKSHAFT KET	CHIAVETTA		1			
33	9.851-454.0	EYEBOLT	GOLFARE M12		1			
34*		CRANKSHAFT SEAL	ANELLO RADIALE	F	1	•	•	•
35	9.850-549.0	SHIM	DISTANZIALE		1			
36	9.850-645.0	BEARING HOUSING	FLANGIA APERTA		1			
37*		PLUNGER BOLT	VITE PISTONE	D-H	3			

NESINPER | Distribucion y gestion tecnica Peru-Europa | www.nesinper.com | +51 998 262 061

Item Pos	Part Number Codice	Description	Descrizione	KIT	Q.TY Q.TÀ	HHP2750R/L	HHP3650R/L	HHP4150R/L
38*		"O" RING Ø1.78X11.11	"O" RING Ø1.78X11.11	D-H	3			
39*		*PLUNGER DIA. 20*	PISTONE Ø20	D	3			
40*		*COPPER SPACER*	ROSETTA RAME PISTONE	D	3			
41*		*PLUNGER ROD*	ASTA PISTONE	H	3			
42*		*SNAP RING*	ANELLO Ø22	H	6			
43*		*CONNECTING ROD PIN*	SPINOTTO	H	3			
44*		*CONNECTING ROD*	BIELLA	H	3			
45*		*SPRING WASHER*	ROSETTA ELASTICA Ø8	H	6			
46*		*CONNECTING ROD SCREW*	VITE BIELLA	H	6	•	•	•
47*		*"O" RING Ø2.62X209.23*	"O" RING Ø2.62X209.23	F	1			
48	9.850-386.0	*CRANKCASE COVER*	COPERCHIO CARTER		1			
49*		*"O" RING Ø2.62X17.13*	"O" RING Ø2.62X17.13	F	1			
50*		*BRASS PLUG G 1/2*	TAPPO OTTONE G 1/2	F	1			
51*		*SIGHT GLASS, G 1"*	SPIA LIVELLO OLIO G1"	F	1			
52*		*OIL DIP STICK G ¾*	TAPPO SFIATO OLIO G 3/4	F	1			
53	9.851-480.0	*COVER SCREW*	VITE COPERCHIO		5			
54*		*VALVE PLUG*	TAPPO VALVOLA	G	3			

NESINPER | Soporte tecnico y comercial

Hidrolavadoras Nesinper S.A.C.

Deyvi Medrano Q. | Gestion tecnico-comercial | dmedrano@nesinper.com

WhatsApp PE: +51 998 262 061

info@nesinper.com | www.nesinper.com

Gestion tecnica Peru-Europa