NESINPER | Distribución y gestión técnica Perú-Europa
Hidrolavadoras Nesinper S.A.C.
Deyvi Medrano Q. | Gestión técnico-comercial
WhatsApp PE: +51 998 262 061 | dmedrano@nesinper.com
Ascoli Piceno - Italia | Tel. IT: +39 0735 366543
info@nesinper.com | www.nesinper.com

MXT 2025 – 150 l/min – 130 l/min

Caratteristiche Tecniche **Albero maschio Ø 40 – Solid shaft Ø30** **Technical Characteristics**

Pump Pompa	Pressure Pressione		Volume Portata		RPM	Power Potenza	
	bar	PSI	l/min	GPM	giri/min	HP	kW
MXT1510	100	1450	150	39,6	1450	37,7	27,7
MXT1313	130	1885	126	33,3		40,6	30,3

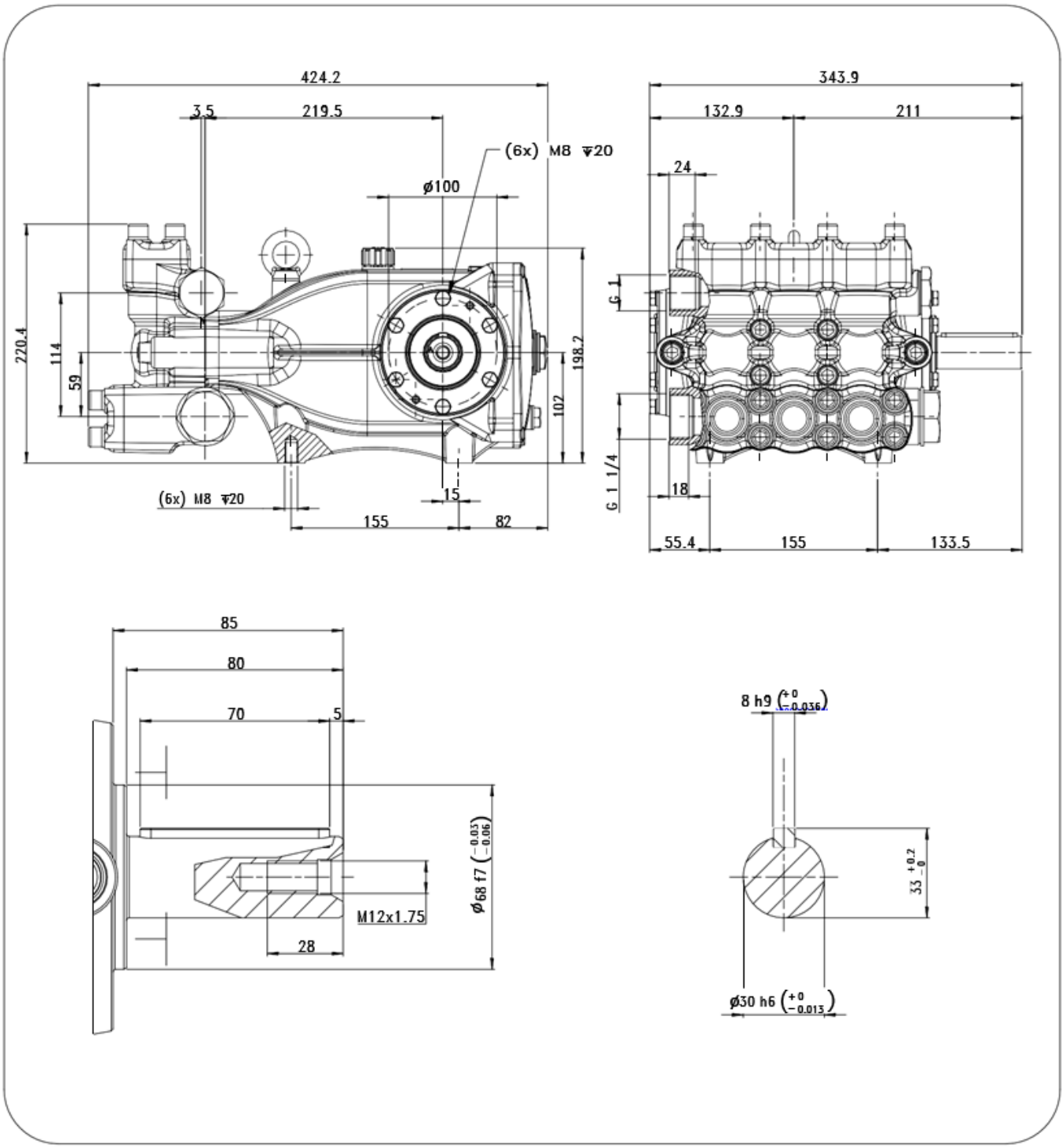

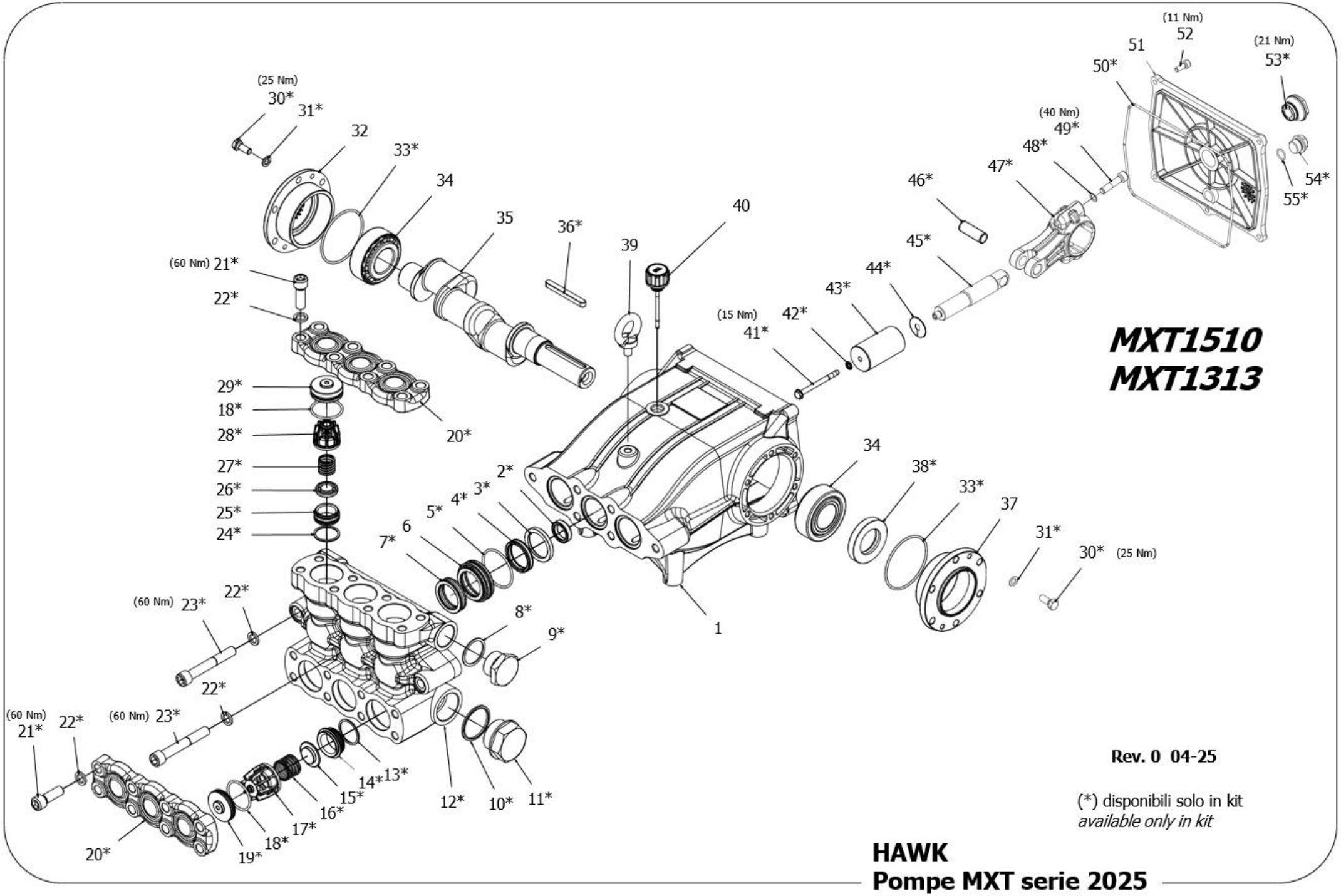

MXT1510
MXT1313

Rev. 0 04-25

(*) disponibili solo in kit
available only in kit

HAWK
Pompe MXT serie 2025
MXT pumps 2025 series

NESINPER | Distribución y gestión técnica Perú-Europa | www.nesinper.com | +51 998 262 061

MXT SERIES 2025

ORDINARY MAINTENANCE KIT / KIT MANUTENZIONE ORDINARIA

KIT	*Item* Pos	*Part Number* Codice	*Description*	Descrizione	*Q.TY per pump* - Q.TÀ per pompa	*MXT1015*	*MXT1313*
A	4- 5- 7	1.905-294.0	PISTON SEAL PACKING Ø36	KIT GUARNIZIONI Ø36	1	•	•
B	13-14-15-16-17-18	1.905-295.0	INLET VALVE	KIT VAM ASPIRAZIONE	1		
C	24-25-26-27-28	1.905-296.0	OUTLET VALVE	VALVOLA MANDATA	1		

EXTRAORDINARY MAINTENANCE KIT / KIT MANUTENZIONE STRAORDINARIA

KIT	*Item* Pos	*Part Number* Codice	*Description*	Descrizione	*Q.TY per pump* - Q.TÀ per pompa	*MXT1015*	*MXT1313*
D	2	1.099-766.0	*PLUNGER OIL SEALS*	TENUTE OLIO ASTA PISTONE	1	•	•
E	41 - 42- 43- 44	1.905-297.0	PLUNGER	PISTONE	3		
F	33- 38- 50- 53- 54- 55	1.099-805.0	*KIT CRANCKASE SEALS*	KIT TENUTE CARTER	1		
G	41 -42- 43 - 41	1.905-298.0	KIT PLUNGER - CONNECTING ROD	KIT ASTA PISTONE-BIELLA	3		
H	3- 4- 5- 6- 7	1.905-299.0	COMPLETE SEAL PACKING	KIT COMPLETO GUARNIZIONI	1		
I	3 – 4 - 5 – 6 - 7 - 8 - 9 - 10 - 11 - 12 – 13 -14- 15 - 16 - 17– 18 – 19 – 20 - 21 –22 – 23 - 24 - 25 – 26 -27 - 28 - 29 -	1.905-300.0	COMPLETE CYLINDER HEAD	TESTATA COMPLETA	1		

"Q.TY by Pump" => Necessary quantity to repair one pump
"Q.TA' per Pompa" => Quantità necessaria per riparare una pompa

Part number Codice	*Description*	*Descrizione*
1.905-301.0	*TOOL KIT MXT Ø36*	*TOOL KIT MXT Ø36*
1.904-418.0	*TOOL KIT EXTRAORDINARY*	*TOOL KIT STRAORDINARIA*

IMPORTANT **IMPORTANTE**

* ***Part available ONLY in kit***
Disponibile SOLO in kit

(...) Parts pre-assembled
Parti pre-assemblate

NESINPER | Distribución y gestión técnica Perú-Europa | www.nesinper.com | +51 998 262 061

PARTS LIST LISTA PARTI

Item Pos	*Part Number* Codice	*Description*	Descrizione	*KIT*	*Q.TY* Q.TÀ	*MXT1510*	*MXT1313*
1	9.854-160.0	*CRANCKCASE*	CARTER		1		
2*		*PLUNGER OIL SEAL*	ANELLO RADIALE	D	3		
3*		*SUPPORT RING Ø36*	PRESSORE Ø36	H - I	3		
4*		*LOW PRESSURE SEAL*	GUARN. B.P.	A - H - I	3		
5*		*O-RING 3200*	O - RING	A - H - I	3		
6*		*INTERMEDIATE RING*	DIFFUSORE	H - I	3		
7*		*HIGHT PRESSURE SEAL*	GUARN. "U" AP	A - H - I	3		
8*		*COPPER SPACER G1"*	GUARNIZIONE G1"	I	3		
9*		*BRASS PLUG G1"*	TAPPO G1”	I	1		
10*		*COPPER SPACER G1”1/4"*	GUARNIZIONE G 1” 1/4"	I	1		
11*		*BRASS PLUG G1" 1/4*	TAPPO G1" 1/4	I	1		
12*		*MANIFOLD HOUSING Ø36*	TESTATA OTTONE Ø36	I	1		
13*		*O- RING Ø2.62x31.42*	O-RING Ø2.62x31.42	B - I	3		
14*		*SUCTION VALVE SEAT*	SEDE VAM ASPIRAZIONE	B - I	3		
15*		*VALVE PLATE*	PIATTELLO VAM	B - I	3		
16*		*SPRING*	MOLLA ASPIRAZIONE	B - I	3		
17*		*VALVE CAGE*	GABBIA VAM	B - I	3	•	•
18*		*O-RING3150 Ø2,62x37,77*	O-RING 3150 Ø2,62x37,77	B - I	6		
19*		*VALVE PLUG*	TAPPO VAM ASPIRAZIONE	I	3		
20*		*MANIFOLD HOUSING COVER*	COPERCHIO TESTATA	I	2		
21*		*WASHER*	ROSETTA	I	22		
22*		*COVER SCREW*	VITE COPERCHIO TESTATA	I	16		
23*		*SCREW MANIFOLD*	VITE TESTATA	I	6		
24*		*O-RING*	O-RING	C - I	3		
25*		*VALVE SEAT*	SEDE VAM	C - I	*3*		
26*		*VALVE PLATE*	*PIATTELLO VAM*	C - I	*3*		
27*		*VALVE SPRING*	MOLLA VAM	C - I	3		
28*		*VALVE CAGE*	GABBIA	C - I	3		
29*		*VALVE PLUG*	TAPPO VAM	I	3		
30*	9.851-503.0	*BEARING HOUSING SCREW*	VITE FLANGIA CUSCINETTI		12		
31*	9.851-114.0	*WASHER*	ROSETTA M8 UNI 6592V		12		
32*	9.850-641.0	*BEARING HOUSING*	FLANGIA CHIUSA		1		
33		*O-RING*	O-RING	F	2		
34	9.851-963.0	*ROLLER BEARING*	CUSCINETTO		2		
35	9.850-229.0	*CRANKSHAFT SPTO Ø30*	ALBERO SPTO Ø30		1	•	
	9.850-231.0	*CRANKSHAFT SPTO Ø30*	ALBERO SPTO Ø30		1		•

NESINPER | Distribución y gestión técnica Perú-Europa | www.nesinper.com | +51 998 262 061

Item Pos	Part Number Codice	Description	Descrizione		Q.TY Q.TÀ	MXT1510	MXT1313
36	9.850-450.0	CRANKSHAFT KEY	LINGUETTA		1		
37	9.850-642.0	BEARING HOUSING	FLANGIA APERTA		1		
38*		PLUNGER OIL SEAL	ANELLO RADIALE	F	1		
39	9.851-457.0	EYEBOLT	GOLFARE		1		
40	9.851-287.0	OIL DIP STICK	TAPPO SFIATO OLIO		1		
41		PLUNGER INOX SCREW	VITE INOX PISTONE	E	3		
42		PLINGER WASHER	BONDED SEAL	E	3		
43		PLUNGER	PISTONE	E	3		
44*		COPPER SPACER	ROSETTA DI RAME	E	3		
45*		PLUNGER ROD	ASTA GUIDA PISTONE	G	3	•	•
46*		CONNECTING ROD PIN	SPINOTTO	G	3		
47		CONNECTING ROD	BIELLA	G	3		
48*		SCHNORR WASHER	ROSETTA SCHNORR	G	6		
49*		CONNECTING ROD SCREW	VITE BIELLA	G	6		
50*		O-RING	O-RING	F	1		
51	9.850-393.0	CRANKCASE COVER	COPERCHIO POSTERIORE		1		
52	9.851-474.0	COVER SCREW	VITE COPERCHIO		5		
53*		SIGHT GLASS G 3/4”	SPIA LIVELLO OLIO G3/4	F	1		
54*		BRASS PLUG G3/8"	TAPPO G3/8"	F	1		
55*		O-RING	O-RING	F	1		

NESINPER | Soporte técnico y comercial

Hidrolavadoras Nesinper S.A.C.

Deyvi Medrano Q. | Gestión técnico-comercial | dmedrano@nesinper.com

WhatsApp PE: +51 998 262 061

Ascoli Piceno - Italia | Tel. IT: +39 0735 366543

info@nesinper.com | www.nesinper.com

Gestión técnica Perú-Europa