NESINPER | Distribucion y gestion tecnica Peru-Europa
Hidrolavadoras Nesinper S.A.C.
Deyvi Medrano Q. | Gestion tecnico-comercial
WhatsApp PE: +51 998 262 061 | dmedrano@nesinper.com

info@nesinper.com | www.nesinper.com

# NHDP – 120 BAR

**Caratteristiche Tecniche** **Albero maschio – Solid shaft** **Technical Characteristics**

| Pump Pompa | Pressure Pressione | | Volume Portata | | | | RPM giri/min | | Power Potenza | | | |
|---|---|---|---|---|---|---|---|---|---|---|---|---|
| | | | l/min | | GPM | | | | HP | | kW | |
| | bar | PSI | 50 Hz | 60 Hz | 50 Hz | 60 Hz | 50 Hz | 60 Hz | 50 Hz | 60 Hz | 50 Hz | 60 Hz |
| NHDP0412 | 120 | 1740 | 4 | 4.8 | 1.1 | 1.3 | 1450 | 1740 | 1.2 | 1.5 | 0.9 | 1.1 |
| NHDP0612 | 120 | 1740 | 6 | 7.2 | 1.6 | 1.9 | 1450 | 1740 | 1.9 | 2.3 | 1.4 | 2.3 |
| NHDP8512 | 120 | 1740 | 8.5 | 10.1 | 2.2 | 2.7 | 1450 | 1740 | 2.6 | 3.1 | 1.9 | 2.3 |
| NHDP1012 | 120 | 1740 | 10 | 12 | 2.6 | 3.2 | 1450 | 1740 | 3.0 | 3.6 | 2.2 | 2.6 |
| NHDP1112 | 120 | 1740 | 11 | 13.2 | 2.9 | 3.5 | 1450 | 1740 | 3.4 | 4.1 | 2.5 | 3.0 |
| NHDP1212 | 120 | 1740 | 12 | 14 | 3.1 | 3.7 | 1450 | 1740 | 3.6 | 4.4 | 2.7 | 3.2 |

Dimensioni d'ingombro *Overall dimensions*

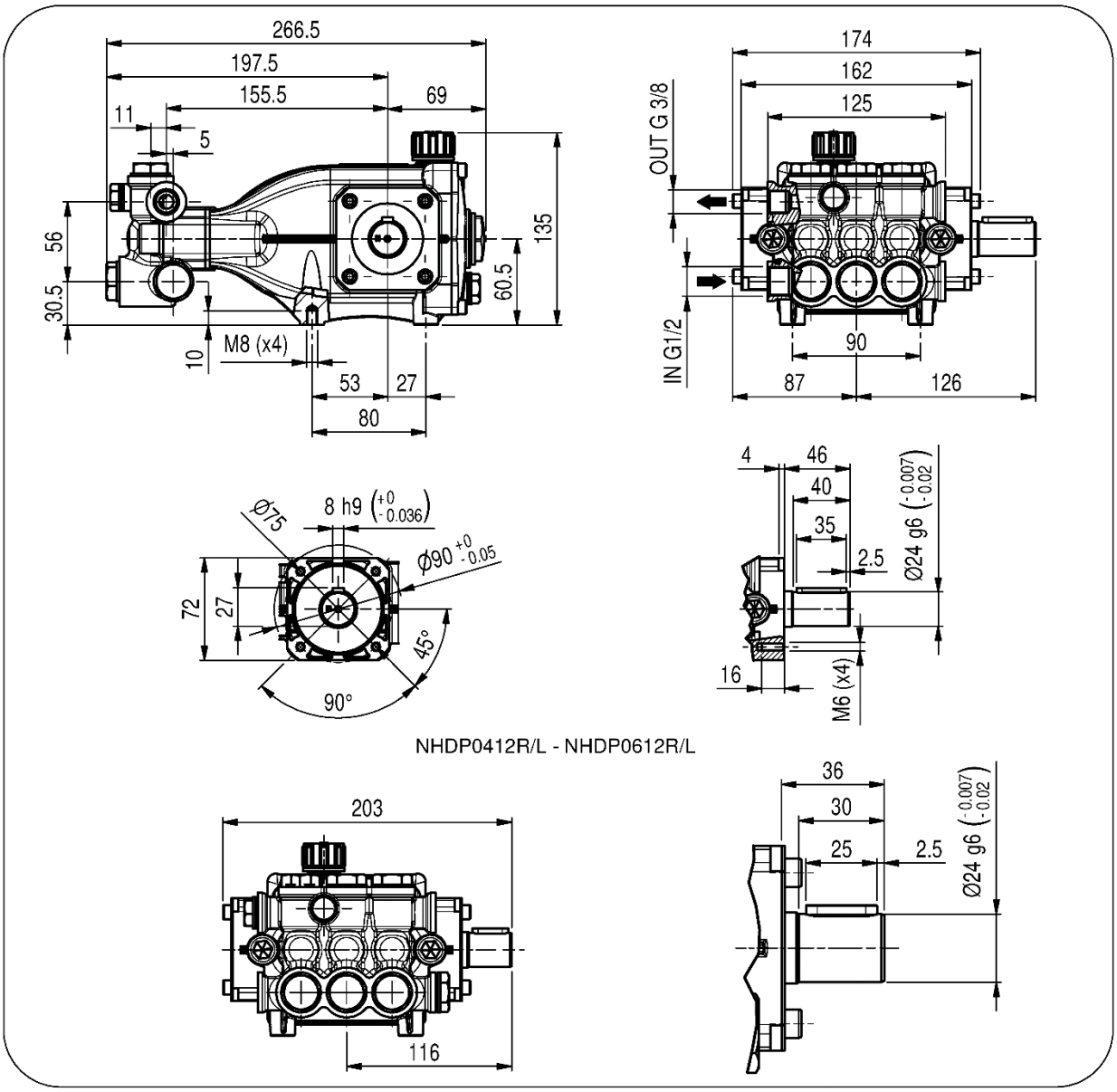


**Lubrificazione: Olio SAE 10W40**
**Capacità: 0.4 Litri**
**Peso pompa: 8.2kg**

**Lubrication: SAE 10W40 Oil**
**Capacity: 0.4 Litres**
**Weight: 8.2 kg**

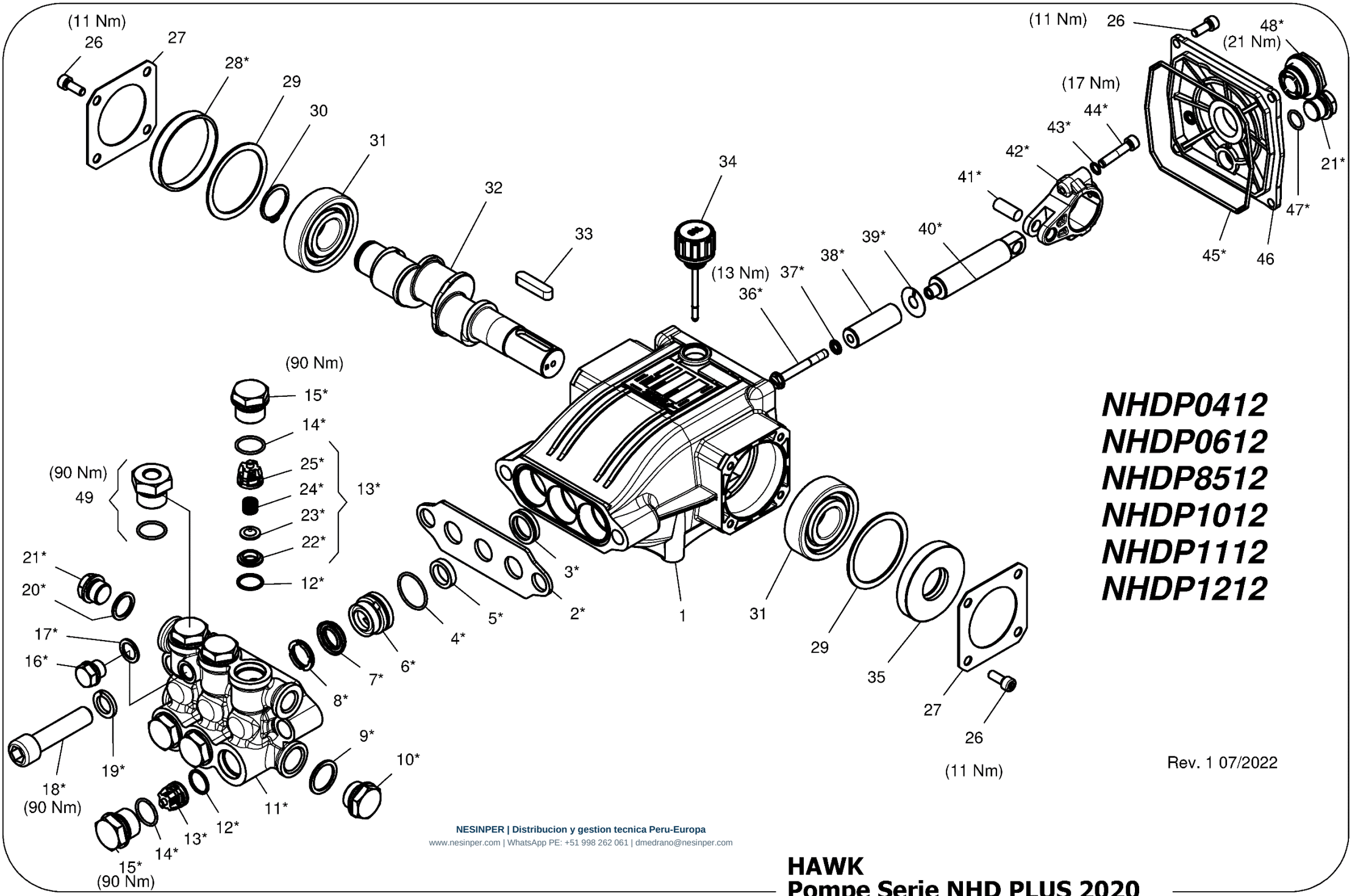


**NESINPER | Distribucion y gestion tecnica Peru-Europa**
www.nesinper.com | WhatsApp PE: +51 998 262 061 | dmedrano@nesinper.com

# HAWK
## Pompe Serie NHD PLUS 2020
## NHD PLUS Pumps 2020 Serie

# NHDP 2020 SERIES

## *ORDINARY MAINTENANCE KIT* / KIT MANUTENZIONE ORDINARIA

| *KIT* | *Item* Pos. | *Part Number* Codice | *Description* | Descrizione | *Q.TY by Pump* Q.TÀ per Pompa | *NHDP0412R/L* | *NHDP0612R/L* | *NHDP8512R/L* | *NHDP1012R/L* | *NHDP1112R/L* | *NHDP1212R/L* |
|---|---|---|---|---|---|---|---|---|---|---|---|
| A | 4- 5 – 6 - 7- 8 18 | 1.904-739.0 | *PLUNGER SEALS DIA. 16 mm* | GUARNIZIONI PISTONE Ø16 | 1 | • | • | • | • | • | • |
| B | 12- 13 (22- 23 24- 25) -15 | 1.905-617.0 | *COMPLETE VALVE* | VALVOLA COMPLETA | 1 | | | | | | |

## *EXTRAORDINARY MAINTENANCE KIT* / KIT MANUTENZIONE STRAORDINARIA

| *KIT* | *Item* Pos. | *Part Number* Codice | *Description* | Descrizione | *Q.TY by Pump* Q.TÀ per Pompa | *NHDP0412R/L* | *NHDP0612R/L* | *NHDP8512R/L* | *NHDP1012R/L* | *NHDP1112R/L* | *NHDP1212R/L* |
|---|---|---|---|---|---|---|---|---|---|---|---|
| C | 36 - 37- 38- 39 | 1.099-738.0 | *PLUNGER DIA. 16 mm* | PISTONE Ø16 | 3 | • | • | • | • | • | • |
| D | 3 | 1.099-740.0 | *PLUNGER OIL SEALS* | ANELLI TENUTA OLIO ASTA | 1 | | | | | | |
| E | 21- 28- 35- 45 47- 48 | 1.905-624.0 | *KIT CRANKCASE SEALS* | KIT TENUTE CARTER | 1 | | | | | | |
| F | 4 - 5- 6- 7 8 - 9- 10- 11- 12 13(21 – 22- 23 - 24) – 16 - 17- 18 - 19- 20- 21 | 1.904-740.0 | *COMPLETE MANIFOLD* | TESTATA COMPLETA | 1 | | | | | | |
| G | 40 - 41- 42- 43- 44 | 1.905-742.0 | *CONNECTING ROD PLUNGER ROD ASSY* | PREMONTATO ASTA-BIELLA PISTONE | 3 | | | | | | |
| H | 14- 15 | 1.904-249.0 | *VALVE PLUG ASSY* | PREMONTATO TAPPO VAM | 6 | | | | | | |

***"Q.TY by Pump" => Necessary quantity to repair one pump***
**"Q.TA' per Pompa" => Quantità necessaria per riparare una pompa**

NESINPER | Distribucion y gestion tecnica Peru-Europa | www.nesinper.com | +51 998 262 061

## OPTIONAL

| Item Pos. | Part Number Codice | Description | Descrizione | Q.TY by Pump Q.TÀ per Pompa | NHDP0412R/L | NHDP0612R/L | NHDP8512R/L | NHDP1012R/L | NHDP1112R/L | NHDPP1212R/ |
|---|---|---|---|---|---|---|---|---|---|---|
| 49 | 9.853-424.0 | *THREADED BRASS PLUG G1/4* | PREMONTATO TAPPO FORATO | 1 | • | • | • | • | • | • |

## TOOL KIT

| Part Number Codice | Description | Descrizione | Q.TY by Pump Q.TÀ per Pompa | NHDP0412R/L | NHDP0612R/L | NHDP8512R/L | NHDP1012R/L | NHDP1112R/L | NHDP1212R/L |
|---|---|---|---|---|---|---|---|---|---|
| 1.904-744.0 | TOOL-KIT | TOOL-KIT | 1 | • | • | • | • | • | • |
| 1.905-591.0 | TOOL-KIT EXTRAORDINARY | TOOL-KIT MANUTENZIONE STRAORINARIA | 1 | | | | | | |

**IMPORTANT** **IMPORTANTE**

* ***Part available ONLY in kit***
**Disponibile SOLO in kit**

(…) **Parts pre-assembled**
**Parti pre-assemblate**

NESINPER | Distribucion y gestion tecnica Peru-Europa | www.nesinper.com | +51 998 262 061

# *PARTS LIST* LISTA PARTI

| Item Pos | Part Number Codice | Description | Descrizione | KIT | Q.TY Q.TÀ | NHDP0412R/L | NHDP0612R/L | NHDP8512R/L | NHDP1012R/L | NHDP1112R/L | NHDP1212R/L |
|---|---|---|---|---|---|---|---|---|---|---|---|
| 1 | 9.850-369.0 | CRANKCASE | CARTER | | 1 | | | | | | |
| 2 | 9.853-555.0 | NHD PLUS CYLINDERHEAD SPACER | DISTANZIALE TESTATA NHD PLUS | | 1 | | | | | | |
| 3* | | PLUNGER OIL SEAL | ANELLO RADIALE | D | 3 | | | | | | |
| 4* | | "O" RING Ø1.78X26.7 | "O" RING Ø1.78X26.7 | A-F | 3 | | | | | | |
| 5* | | "U" SEAL, DIA. 16 MM | ANELLO TENUTA "U" Ø16 | A-F | 3 | | | | | | |
| 6* | | PRESSURE RING DIA. 16 MM | PRESSORE Ø16 "V" PLASTICA (NHD) | A-F | 3 | | | | | | |
| 7* | | "V" SEAL, DIA. 16 MM | ANELLO TENUTA "V" Ø16 | A-F | 3 | | | | | | |
| 8* | | SUPPORT RING DIA. 16 MM | DIFFUSORE Ø16 | A-F | 3 | | | | | | |
| 9* | | COPPER WASHER G1/2 | GUARNIZIONE RAME G1/2 | F | 1 | | | | | | |
| 10* | | BRASS PLUG G1/2 | TAPPO OTTONE G1/2 | F | 1 | | | | | | |
| 11* | | CYLINDERHEAD | TESTATA NHD PLUS OT58 | F | 1 | | | | | | |
| 12* | | "O" RING Ø1.78X15.6 | "O" RING Ø1.78X15.6 | B-F | 6 | | | | | | |
| 13* | | VALVE ASSEMBLY | VALVOLA PREMONTATA | B-F | 6 | | | | | | |
| 14* | | "O" RING Ø1,78X18.77 | "O" RING Ø1.78X18.77 | B-F-H | 6 | | | | | | |
| 15* | | VALVE PLUG | TAPPO VALVOLA | F-H | 6 | | | | | | |
| 16* | | BRASS PLUG G1/4 | TAPPO OTTONE G1/4 | F | 1 | • | • | • | • | • | • |
| 17* | | COPPER WASHER G1/4 | GUARNIZIONE RAME G1/4 | F | 1 | | | | | | |
| 18* | | MANIFOLD STUD BOLT M14X60 | VITE TCEI M14X60 | A-F | 2 | | | | | | |
| 19* | | LOCK-WASHER | ROSETTA ELASTICA Ø14 | F | 2 | | | | | | |
| 20* | | COPPER WASHER G3/8 | GUARNIZIONE RAME G 3/8 | F | 1 | | | | | | |
| 21* | | BRASS PLUG G 3/8 | TAPPO OTTONE G 3/8 | F-E | 2 | | | | | | |
| 22* | | VALVE SEAT | SEDE VALVOLA | B-F | 6 | | | | | | |
| 23* | | VALVE PLATE | PIATTELLO VALVOLA | B-F | 6 | | | | | | |
| 24* | | VALVE SPRING | MOLLA VALVOLA | B-F | 6 | | | | | | |
| 25* | | VALVE CAGE | GABBIA VALVOLA | B-F | 6 | | | | | | |
| 26 | 9.851-474.0 | SCREW M6X16 | VITE TCEI M6X16 | | 12 | | | | | | |
| 27 | 9.850-379.0 | BEARING COVER | COPERCHIO CUSCINETTO | | 2 | | | | | | |
| 28* | | BEARING SEAL | CAPPELLOTTO CUSCINETTO | E | 1 | | | | | | |
| 29 | 9.850-554.0 | CRANKSHAFT SEAL SPACER | DISTANZIALE PARAOLIO ALBERO | | 2 | | | | | | |
| 30 | 9.851-198.0 | SNAP RING DIA. 25 MM | ANELLO Ø25 | | 1 | | | | | | |
| 31 | 9.850-460.0 | BALL BEARING | CUSCINETTO A SFERE | | 2 | | | | | | |
| 32 | 9.850-225.0 | SINGLE-ENDED SHAFT | ALBERO SEMPLICE P.D.F | | 1 | | | | | • | |
| | 9.850-226.0 | " " " | " " " | | 1 | | | • | | | |
| | 9.850-227.0 | " " " | " " " | | 1 | | | | • | | |
| | 9.851-956.0 | " " " | " " " | | 1 | | | | | | • |
| | 9.850-245.0 | " " " | " " " | | 1 | • | | | | | |
| | 9.850-246.0 | " " " | " " " | | 1 | | • | | | | |

NESINPER | Distribucion y gestion tecnica Peru-Europa | www.nesinper.com | +51 998 262 061

| Item Pos | Part Number Codice | Description | Descrizione | KIT | Q.TY Q.TÀ | NHDP0412R/L | NHDP0612R/L | NHDP8512R/L | NHDP1012R/L | NHDP1112R/L | NHDP1212R/L |
|---|---|---|---|---|---|---|---|---|---|---|---|
| 33 | 9.850-446.0 | *CRANKSHAFT KEY* | CHIAVETTA | | 1 | | | • | • | • | • |
| | 9.850-443.0 | " " | " | | 1 | • | • | | | | |
| 34 | 9.851-286.0 | *OIL DIP STICK* | TAPPO LIVELLO OLIO | | 1 | | | | | | |
| 35* | | *CRANKSHAFT SEAL* | ANELLO RADIALE | E | 1 | | | | | | |
| 36* | | *PLUNGER BOLT* | VITE PISTONE | C | 3 | | | | | | |
| 37* | | *BONDED SEAL - Ø6,7X11X1 AISI 304* | BONDED SEAL - Ø6,7X11X1 AISI 304 | C | 3 | | | | | | |
| 38* | | *PLUNGER DIA. 16 MM* | PISTONE Ø16 | C | 3 | | | | | | |
| 39* | | *COPPER SPACER* | ROSETTA RAME | C | 3 | | | | | | |
| 40* | | *PLUNGER ROD* | ASTA PISTONE | G | 3 | | | | | | |
| 41* | | *CONNECTING ROD PIN* | SPINOTTO | G | 3 | • | • | • | • | • | • |
| 42* | | *CONNECTING ROD* | BIELLA | G | 3 | | | | | | |
| 43* | | *SPRING WASHER DIA. 6 MM* | ROSETTA SCHNORR Ø6 | G | 6 | | | | | | |
| 44* | | *CONNECTING ROD SCREW* | VITE M6X30 | G | 6 | | | | | | |
| 45* | | *"O" RING Ø2.62X111.62* | "O" RING Ø2.62X111.62 | E | 1 | | | | | | |
| 46 | 9.850-392.0 | *CRANKCASE COVER* | COPERCHIO POSTERIORE | | 1 | | | | | | |
| 47* | | *"O" RING Ø1.78X14* | "O" RING Ø1.78X14 | E | 1 | | | | | | |
| 48* | | *SIGHT GLASS G3/4* | SPIA LIVELLI OLIO G3/4 | E | 1 | | | | | | |

**NESINPER | Soporte tecnico y comercial**

**Hidrolavadoras Nesinper S.A.C.**

Deyvi Medrano Q. | Gestion tecnico-comercial | dmedrano@nesinper.com

WhatsApp PE: +51 998 262 061

info@nesinper.com | www.nesinper.com

**Gestion tecnica Peru-Europa**