NESINPER | Distribucion y gestion tecnica Peru-Europa
Hidrolavadoras Nesinper S.A.C.
Deyvi Medrano Q. | Gestion tecnico-comercial
WhatsApp PE: +51 998 262 061 | dmedrano@nesinper.com

info@nesinper.com | www.nesinper.com

NHDP – 150 BAR

Caratteristiche Tecniche — Albero maschio – Solid shaft — Technical Characteristics

Pump Pompa	Pressure Pressione		Volume Portata				RPM giri/min		Power Potenza			
			l/min		GPM				HP		kW	
	bar	PSI	50 Hz	60 Hz	50 Hz	60 Hz	50 Hz	60 Hz	50 Hz	60 Hz	50 Hz	60 Hz
NHDP8515	150	2175	8.5	10.1	2.2	2.7	1450	1740	3.2	3.8	2.4	2.9
NHDP1015	150	2175	10	12.0	2.6	3.2	1450	1740	3.7	4.7	2.8	3.5
NHDP1115	150	2175	11	13.2	2.9	3.5	1450	1740	4.3	5.1	3.2	3.8
NHDP1215	150	2175	12	14.0	3.1	3.7	1450	1740	4.6	5.4	3.4	4.0
NHDP1315	150	2175	13	15.5	3.4	4.0	1450	1740	5.0	5.8	3.7	4.3
NHDP1415	150	2175	14	17.0	3.7	4.5	1450	1740	5.4	6.4	4.0	4.7
NHDP1515	150	2175	15	18.0	4.0	4.7	1450	1740	5.8	7.0	4.3	5.2
NHDP1815	150	2175	18	21	4.8	5.6	1450	1740	6.9	8.3	5.1	6.1
NHDP2115	150	2175	21	25	5.5	6.6	1450	1740	8.1	9.7	5.9	7.1

Dimensioni d'ingombro — *Overall dimensions*

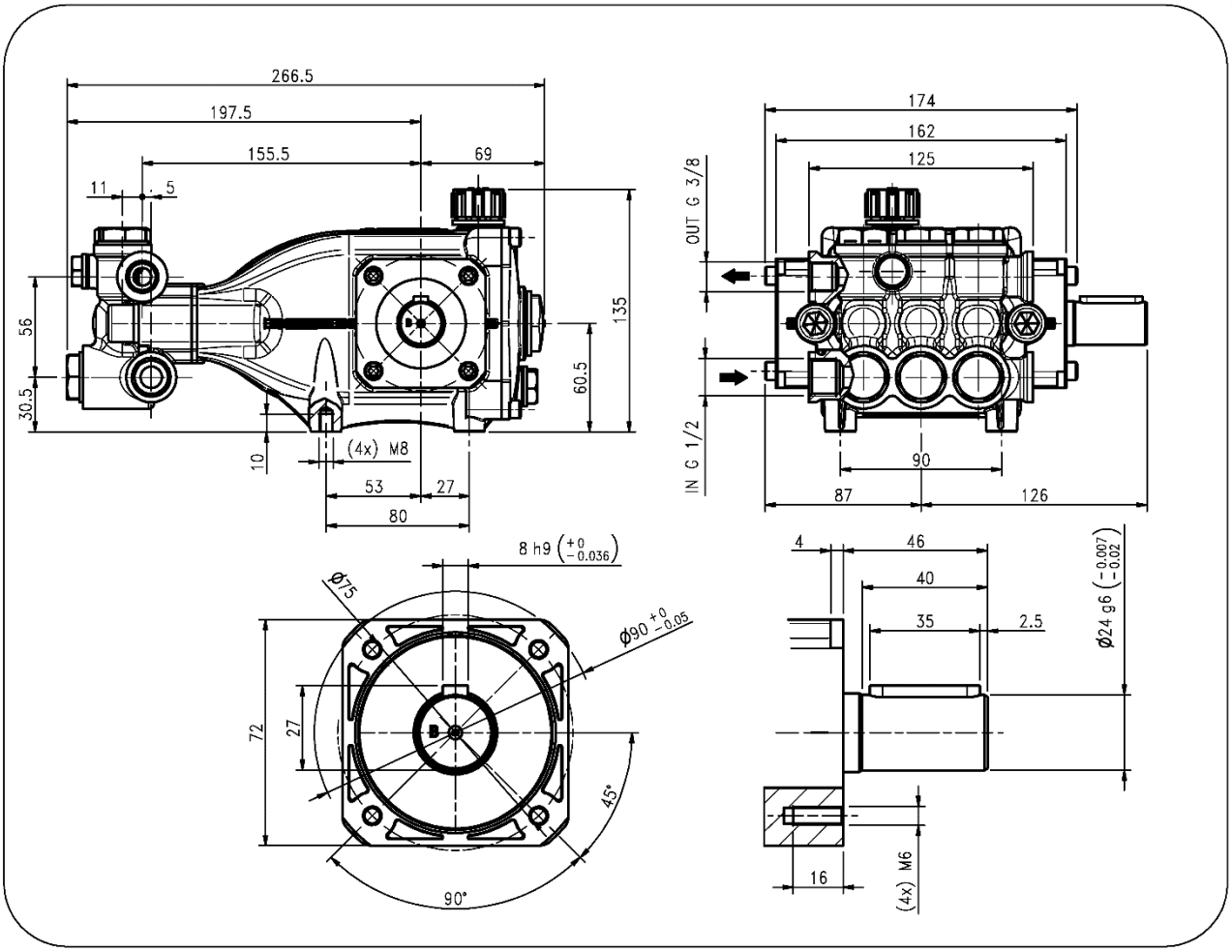

Lubrication: SAE 10W40 Oil
Capacità: 0.4 Litri
Peso pompa: 8.2 kg

Lubrificazione: Olio SAE 10W40
Capacity: 0.4 Litres
Weight: 8.2 kg

NESINPER | Distribucion y gestion tecnica Peru-Europa
Hidrolavadoras Nesinper S.A.
WhatsApp PE: +51 998 262 061 | dmedrano@nesinper.com | www.nesinper.com

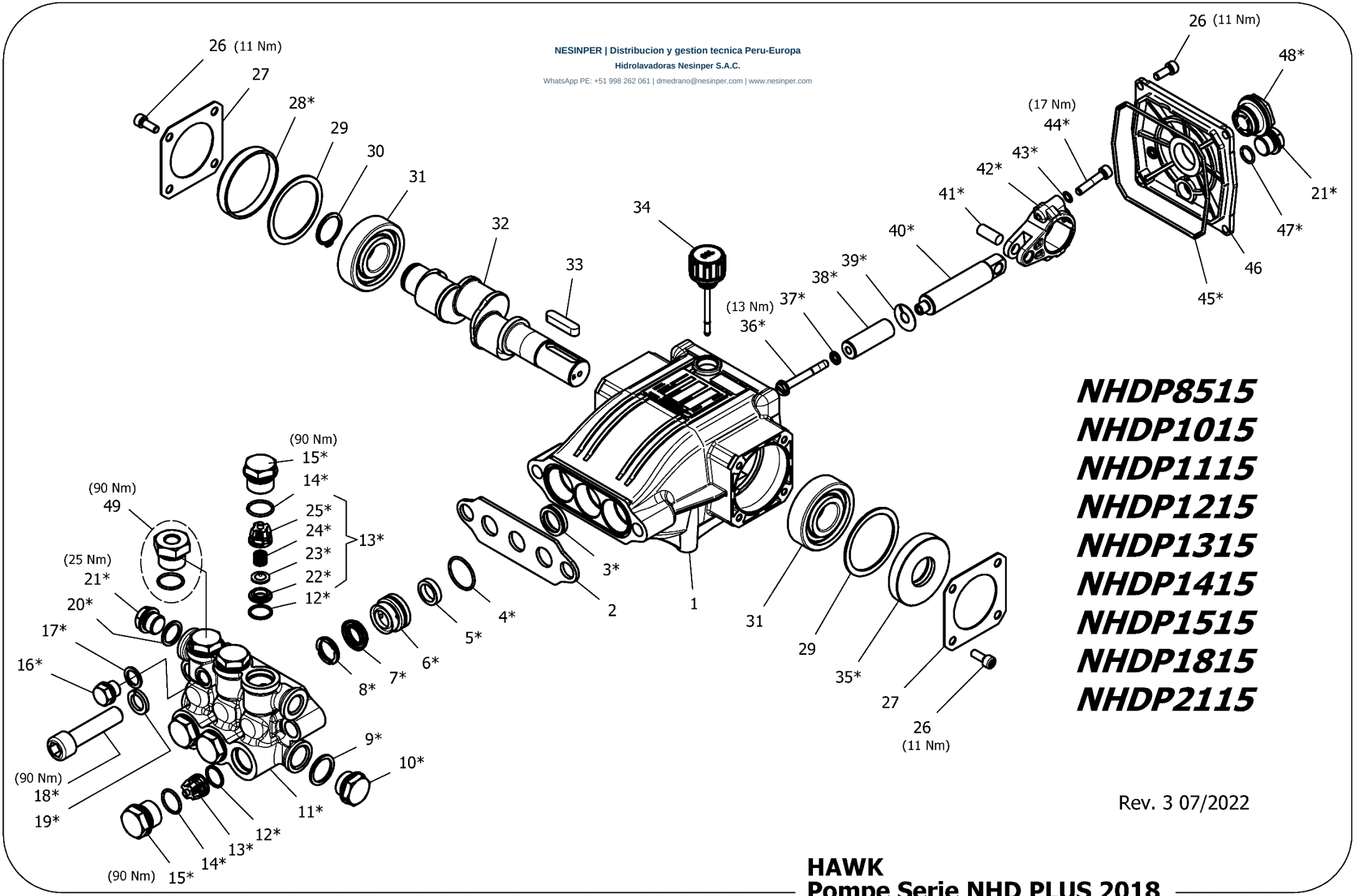

NHDP8515
NHDP1015
NHDP1115
NHDP1215
NHDP1315
NHDP1415
NHDP1515
NHDP1815
NHDP2115

Rev. 3 07/2022

HAWK
Pompe Serie NHD PLUS 2018
NHD PLUS Pumps 2018 Series

NHDP 2018 SERIES

ORDINARY MAINTENANCE KIT / KIT MANUTENZIONE ORDINARIA

KIT	*Item* Pos.	*Part Number* Codice	*Description*	Descrizione	*Q.TY by Pump* Q.TÀ per Pompa	*NHDP8515R/L*	*NHDP1015R/L*	*NHDP1115R/L*	*NHDP1215R/L*	*NHDP1315R/L*	*NHDP1415R/L*	*NHDP1515R/L*	*NHDP1815R/L*	*NHDP2115R/L*
A	4- 5 – 7 - 8- 18	1.905-762.0	*PLUNGER SEALS DIA. 16 mm*	GUARNIZIONI PISTONE Ø16	1	•	•	•	•	•	•	•		
	4 - 5 – 7	1.904-764.0	*PLUNGER SEALS DIA. 18 mm*	GUARNIZIONI PISTONE Ø18	1								•	•
B	12- 13 (22 23- 24- 25) 14	1.905-617.0	*COMPLETE VALVE*	VALVOLA COMPLETA	1	•	•	•	•	•	•	•	•	•

EXTRAORDINARY MAINTENANCE KIT / KIT MANUTENZIONE STRAORDINARIA

KIT	*Item* Pos.	*Part Number* Codice	*Description*	Descrizione	*Q.TY by Pump* Q.TÀ per Pompa	*NHDP8515R/L*	*NHDP1015R/L*	*NHDP1115R/L*	*NHDP1215R/L*	*NHDP1315R/L*	*NHDP1415R/L*	*NHDP1515R/L*	*NHDP1815R/L*	*NHDP2115R/L*
C	4 - 5 - 6- 7- 8- 18	1.905-763.0	*COMPLETE SEALS PACKING DIA. 16 mm*	PACCO COMPLETO GUARNIZIONI PISTONE Ø16	1	•	•	•	•	•	•	•		
		1.904-765.0	*COMPLETE SEALS PACKING DIA. 18 mm*	PACCO COMPLETO GUARNIZIONI PISTONE Ø18									•	•
D	36- 37- 38 39	1.099-738.0	*PLUNGER DIA. 16 mm*	PISTONE Ø16	3	•	•	•	•	•	•	•		
		1.904-766.0	*PLUNGER DIA. 18 mm*	PISTONE Ø18									•	•
E	3	1.099-740.0	*PLUNGER OIL SEALS*	ANELLI TENUTA OLIO ASTA	1	•	•	•	•	•	•	•	•	•
F	21- 28- 35 45- 47- 48	1.905-624.0	*KIT CRANKCASE SEALS*	KIT TENUTE CARTER	1									
G	4- 5 - 6- 7- 8- 9- 10- 11- 12- 13 (22- 23- 24- 25) 14- 15- 16- 17- 18- 19- 20- 21	1.905-764.0	*COMPLETE MANIFOLD DIA. 16 mm*	TESTATA COMPLETA *DIA. 16 mm*	1	•	•	•	•	•	•	•		
		1.904-767.0	*COMPLETE MANIFOLD DIA. 18 mm*	TESTATA COMPLETA *DIA. 18 mm*									•	•
H	40- 41- 42 43- 44	1.905-742.0	*CONNECTING ROD PLUNGER ROD ASSY*	PREMONTATO ASTA-BIELLA PISTONE	3	•	•	•	•	•	•	•	•	•
I	14- 15	1.904-249.0	*VALVE PLUG ASSY*	PREMONTATO TAPPO VAM	6									

"Q.TY by Pump" => Necessary quantity to repair one pump
"Q.TA' per Pompa" => Quantità necessaria per riparare una pompa

NESINPER | Distribucion y gestion tecnica Peru-Europa | www.nesinper.com | +51 998 262 061

OPTIONAL

Item Pos.	Part Number Codice	Description	Descrizione	Q.TY by Pump Q.TÀ per Pompa	NHDP8515R/L	NHDP1015R/L	NHDP1115R/L	NHDP1215R/L	NHDP1315R/L	NHDP1415R/L	NHDP1515R/L	NHDP1815R/L	NHDP2115R/L
49	9.853-424.0	*KIT THREADED BRASS PLUG G1/4*	KIT PREMONTATO TAPPO FORATO	1	•	•	•	•	•	•	•	•	•

TOOL KIT

Part Number Codice	Description	Descrizione	Q.TY by Pump Q.TÀ per Pompa	NHDP8515R/L	NHDP1015R/L	NHDP1115R/L	NHDP1215R/L	NHDP1315R/L	NHDP1415R/L	NHDP1515R/L	NHDP1815R/L	NHDP2115R/L
1.904-744.0	ORDINARY NHDP TOOL-KIT	TOOL-KIT ORDINARIO NHDP	1	•	•	•	•	•	•	•	•	•
1.905-591.0	TOOL KIT EXTRAORDINARY	TOOL-KIT STRAORDINARIO	1									

IMPORTANT **IMPORTANTE**

* ***Part available ONLY in kit***
Disponibile SOLO in kit

(…) **Parts pre-assembled**
Parti pre-assemblate

NESINPER | Distribucion y gestion tecnica Peru-Europa | www.nesinper.com | +51 998 262 061

HAWK INTERNATIONAL

PARTS LIST LISTA PARTI

Item Pos	Part Number Codice	Description	Descrizione	KIT	Q.TY Q.TÀ	NHDP8515R/L	NHDP1015R/L	NHDP1115R/L	NHDP1215R/L	NHDP1315R/L	NHDP1415R/L	NHDP1515R/L	NHDP1815R/L	NHDP2115R/L
1	9.850-369.0	*CRANKCASE*	CARTER		1	•	•	•	•	•	•	•	•	•
2	9.853-555.0	*SPACER PISTON Ø16*	DISTANZIATORE *PISTONE Ø16*		1	•	•	•	•	•	•	•		
	9.853-788.0	*SPACER PISTON Ø18*	DISTANZIATORE *PISTONE Ø18*		1								•	•
3		*PLUNGER OIL SEAL*	ANELLO RADIALE	E	3	•	•	•	•	•	•	•	•	•
4*		*"O" RING Ø1.78X25.12*	"O" RING Ø1. *78X25.12*	A-C-G	3								•	•
		O-RING 2106 - Ø1,78X26,70	O-RING 2106 - Ø1,78X26,70	A-C-G	3	•	•	•	•	•	•	•		
5		*"U" SEAL, DIA. DDI Ø 18 X 24 X 3.8 W2*	ANELLO TENUTA PIST. DDI Ø 18 X 24 X 3.8 W2	A-C-G	3								•	•
		SEAL, DIA. 16 MM	ANELLO TENUTA PIST. Ø16	A-C-G	3	•	•	•	•	•	•	•		
6*		*PRESSURE RING DIA. 18*	DIFFUSORE "U" Ø18	C-G	3								•	•
		"V" PRESSURE RING Ø16	PRESSORE Ø16 "V"	C-G	3	•	•	•	•	•	•	•		
7*		*"U" SEAL, DIA. 18 MM*	ANELLO TENUTA "U" Ø18	A-C-G	3								•	•
		"V" SEAL, DIA. 16 MM	ANELLO TENUTA PIST. Ø16 "V"	A-C-G	3	•	•	•	•	•	•	•		
8*		*SUPPORT RING Ø18*	PRESSORE Ø18	C-G	3								•	•
		SUPPORT RING Ø16	DIFFUSORE Ø16	A-C-G	3	•	•	•	•	•	•	•		
9*		*COPPER WASHER G1/2*	GUARNIZIONE RAME G1/2	G	1	•	•	•	•	•	•	•	•	•
10*		*BRASS PLUG G1/2*	TAPPO OTTONE G1/2	G	1									
11*		*MANIFOLD HOUSING Ø16*	TESTATA *Ø16*	G	1	•	•	•	•	•	•	•		
		MANIFOLD HOUSING Ø18	TESTATA *Ø18*	G	1								•	•
12*		*"O" RING Ø1.78X15.6*	"O" RING Ø1.78X15.6	B-G	6	•	•	•	•	•	•	•	•	•
13*		*VALVE ASSEMBLY*	VALVOLA PREMONTATA	B-G	6									
14*		*"O" RING Ø1,78X18.77*	"O" RING Ø1.78X18.77	B-G-I	6									
15*		*VALVE PLUG*	TAPPO VALVOLA	G-I	6									
16*		*BRASS PLUG G1/4*	TAPPO OTTONE G1/4	G	1									
17*		*COPPER WASHER G1/4*	GUARNIZIONE RAME G1/4	G	1									
18*		*MANIFOLD STUD BOLT M14X60*	VITE TCEI M14X60	A-C-G	2									
19*		*LOCK-WASHER*	ROSETTA ELASTICA Ø14	G	2									
20*		*COPPER WASHER G3/8*	GUARNIZIONE RAME G 3/8	G	1									
21*		*BRASS PLUG G 3/8*	TAPPO OTTONE G 3/8	F-G	2									
22*		*VALVE SEAT*	SEDE VALVOLA	B-G	6									
23*		*VALVE PLATE*	PIATTELLO VALVOLA	B-G	6									
24*		*VALVE SPRING*	MOLLA VALVOLA	B-G	6									
25*		*VALVE CAGE*	GABBIA VALVOLA	B-G	6									
26	9.851-474.0	*SCREW M6X16*	VITE TCEI M6X16		12									
27	9.850-379.0	*BEARING COVER*	COPERCHIO CUSCINETTO		2									
28*		*BEARING SEAL*	CAPPELLOTTO CUSCINETTO	F	1									
29	9.850-554.0	*CRANKSHAFT SEAL SPACER*	DISTANZIALE PARAOLIO ALBERO		2									
30	9.851-198.0	*SNAP RING DIA. 25 MM*	ANELLO Ø25		1									

NESINPER | Distribucion y gestion tecnica Peru-Europa | www.nesinper.com | +51 998 262 061

Item Pos	Part Number Codice	Description	Descrizione	KIT	Q.TY Q.TÀ	NHDP8515R/L	NHDP1015R/L	NHDP1115R/L	NHDP1215R/L	NHDP1315R/L	NHDP1415R/L	NHDP1515R/L	NHDP1815R/L	NHDP2115R/L
31	9.850-460.0	*BALL BEARING*	CUSCINETTO A SFERE		2									
32	9.850-220.0	*SINGLE-ENDED SHAFT*	ALBERO SEMPLICE P.D.F		1							•		
	9.850-224.0	" " "	" " "		1						•		•	
	9.850-225.0	" " "	" " "		1			•						
	9.850-226.0	" " "	" " "		1	•								
	9.850-227.0	" " "	" " "		1		•							
	9.851-956.0	" " "	" " "		1				•					
	9.850-228.0	" " "	" " "		1					•				
	9.853-521.0	" " "	" " "		1									•
33	9.850-446.0	*CRANKSHAFT KEY*	CHIAVETTA		1									
34	9.851-286.0	*OIL DIP STICK*	TAPPO LIVELLO OLIO		1									
35*		*CRANKSHAFT SEAL*	ANELLO RADIALE	F	1	•	•	•	•	•	•	•	•	•
36*		*PLUNGER BOLT*	VITE PISTONE	D	3									
37*		*BONDED SEAL – Ø6,7X11X1 AISI 304*	BONDED SEAL – Ø6,7X11X1 AISI 304	D	3									
38*		*PLUNGER DIA. 16 MM*	PISTONE Ø16	D	3	•	•	•	•	•	•	•		
		PLUNGER DIA. 18 MM	PISTONE Ø18	D	3								•	•
39*		*COPPER SPACER*	ROSETTA RAME	D	3									
40*		*PLUNGER ROD*	ASTA PISTONE	H	3									
41*		*CONNECTING ROD PIN*	SPINOTTO	H	3									
42*		*CONNECTING ROD*	BIELLA	H	3									
43*		*SPRING WASHER DIA. 6 MM*	ROSETTA SCHNORR Ø6	H	6									
44*		*CONNECTING ROD SCREW*	VITE M6X30	H	6	•	•	•	•	•	•	•	•	•
45*		*"O" RING Ø2.62X111.62*	"O" RING Ø2.62X111.62	F	1									
46	9.850-392.0	*CRANKCASE COVER*	COPERCHIO POSTERIORE		1									
47*		*"O" RING Ø1.78X14*	"O" RING Ø1.78X14	F	1									
48*		*SIGHT GLASS G3/4*	SPIA LIVELLI OLIO G3/4	F	1									

NESINPER | Soporte tecnico y comercial

Hidrolavadoras Nesinper S.A.C.

Deyvi Medrano Q. | Gestion tecnico-comercial | dmedrano@nesinper.com

WhatsApp PE: +51 998 262 061

info@nesinper.com | www.nesinper.com

Gestion tecnica Peru-Europa