Caratteristiche Tecniche NMT Nickel Serie 2011 Series *Technical Characteristics*

Pump Pompa	Pressure Pressione		Volume Portata				RPM giri/min		Power Potenza			
			l/min		GPM				HP		kW	
	bar	PSI	50 Hz	60 Hz	50 Hz	60 Hz	50 Hz	60 Hz	50 Hz	60 Hz	50 Hz	60 Hz
NMT1220SR/LN	200	3000	12.5	15.0	3.3	4.0	1000	1200	6.4	7.7	4.7	5.7
NMT1520SR/LN	200	3000	15.0	18.0	4.0	4.7	1000	1200	7.7	9.2	5.7	6.8
NMT1220R/LN	200	3000	12.5	15.0	3.3	4.0	1450	1740	6.4	7.7	4.7	5.7
NMT1520R/LN	200	3000	15.0	18.0	4.0	4.7	1450	1740	7.7	9.2	5.7	6.8
NMT1820R/LN	200	3000	18.0	21.4	4.8	5.6	1450	1740	9.2	11.0	6.8	8.1
NMT2120R/LN	200	3000	21.0	25.0	5.5	6.6	1450	1740	10.7	12.8	7.9	9.4

NESINPER | Distribucion y gestion tecnica Peru-Europa
Hidrolavadoras Nesinper S.A.C.
Deyvi Medrano Q. I Gestion tecnico-comercial
WhatsApp PE: +51 998 262 061 I dmedrano@nesinper.com

info@nesinper.com I www.nesinper.com

Dimensioni d'ingombro *Overall dimensions*

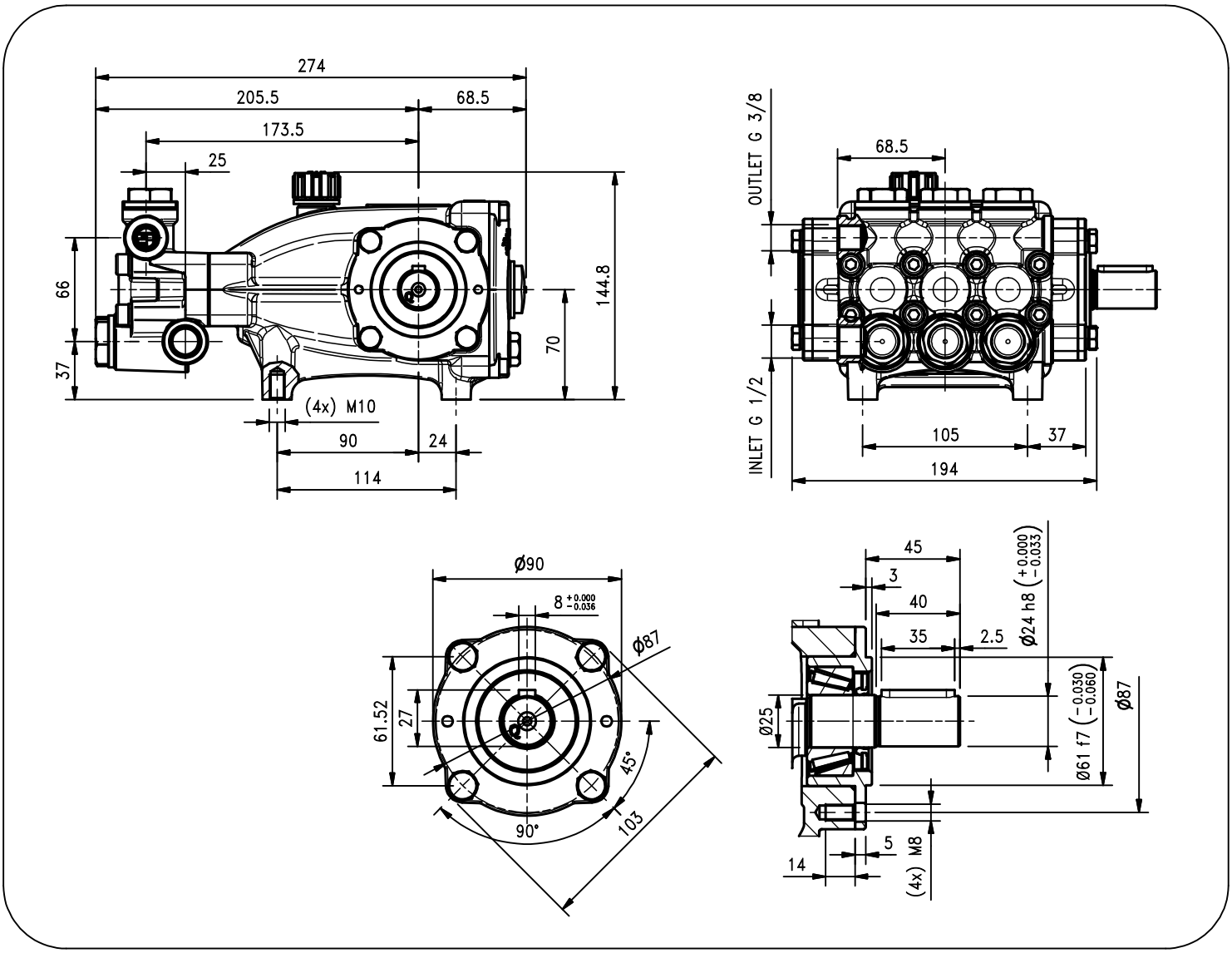

Lubrificazione: Olio SAE 10W-40
Capacità: 0.7 Litri
Peso pompa: 10.3 Kg

rev. 5 02-2022

Lubrication: SAE 10W-40 Oil
Capacity: 0.7 Litres
Weight: 10.3 Kg

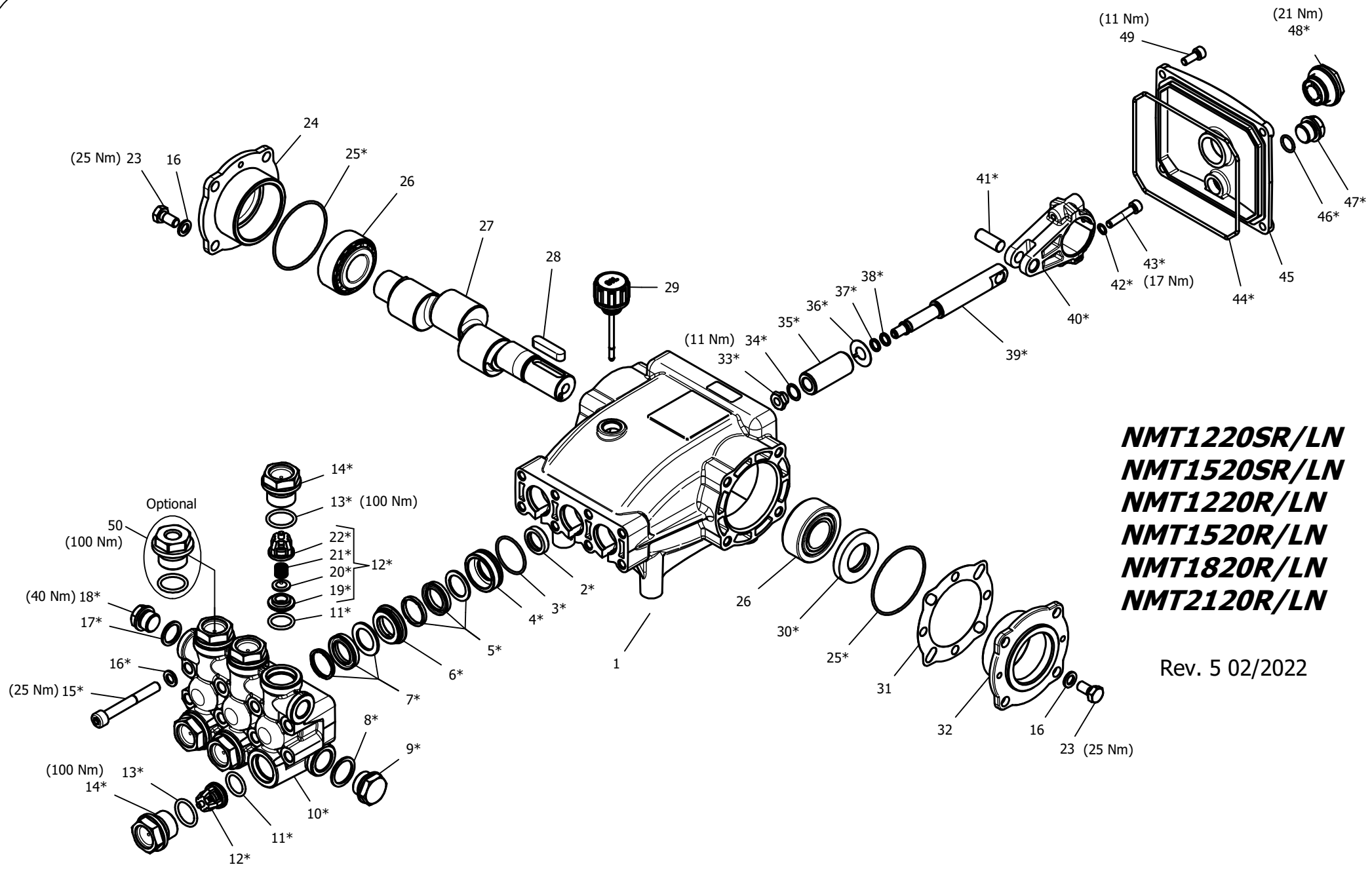

NMT1220SR/LN
NMT1520SR/LN
NMT1220R/LN
NMT1520R/LN
NMT1820R/LN
NMT2120R/LN

Rev. 5 02/2022

NESINPER | Distribucion y gestion tecnica Peru-Europa
www.nesinper.com I WhatsApp PE: +51 998 262 061 I dmedrano@nesinper.com

HAWK
Pompe NMT versioni nichelate 2011
NMT pumps nickel plated 2011 series

NMT NICKEL 2011 SERIES

ORDINARY MAINTENANCE KIT / KIT MANUTENZIONE ORDINARIA

KIT	*Item* Pos.	*Part Number* Codice	*Description*	Descrizione	*Q.TY by Pump* Q.TÀ per Pompa	*NMT1220SR/LN*	*NMT1520SR/LN*	*NMT1220R/LN*	*NMT1520R/LN*	*NMT1820R/LN*	*NMT2120R/LN*
A	3- 5- 7	1.099-747.0	*PLUNGER SEALS DIA. 20 mm*	GUARNIZIONI PISTONE Ø20	1	•	•	•	•	•	•
B	11- 12- 13 (19- 20- 21 22)	1.905-543.0	*COMPLETE VALVE*	VALVOLA COMPLETA	1						

EXTRAORDINARY MAINTENANCE KIT / KIT MANUTENZIONE STRAORDINARIA

KIT	*Item* Pos.	*Part Number* Codice	*Description*	Descrizione	*Q.TY by Pump* Q.TÀ per Pompa	*NMT1220SR/LN*	*NMT1520SR/LN*	*NMT1220R/LN*	*NMT1520R/LN*	*NMT1820R/LN*	*NMT2120R/LN*
C	3- 4- 5- 6- 7	1.905-578.0	*COMPLETE SEALS PACKING DIA. 20 mm*	PACCO COMPLETO GUARNIZIONI PISTONE Ø20	1	•	•	•	•	•	•
D	33- 34- 35 36- 37- 38	1.099-749.0	*PLUNGER DIA. 20 mm*	PISTONE Ø20	3						
E	2	1.099-751.0	*PLUNGER OIL SEALS*	ANELLI TENUTA OLIO ASTA	1						
F	25- 30- 44 46- 47- 48	1.905-542.0	*KIT CRANKCASE SEALS*	KIT TENUTE CARTER	1						
G	3- 4- 5- 6- 7 8- 9- 10- 11 12- 13- 14 15- 16- 17 18 (19- 20 21- 22)	1.099-753.0	*COMPLETE MANIFOLD*	TESTATA COMPLETA	1						
H	33- 34- 37 38- 39- 40 41- 42- 43	1.905-544.0	*CONNECTING ROD PLUNGER ROD ASSY*	PREMONTATO ASTA-BIELLA PISTONE	3						
I	13- 14	1.904-133.0	*VALVE PLUG ASSY*	PREMONTATO TAPPO VAM	6						

"Q.TY by Pump" => Necessary quantity to repair one pump
"Q.TA' per Pompa" => Quantità necessaria per riparare una pompa

NESINPER | Distribucion y gestion tecnica Peru-Europa | www.nesinper.com | +51 998 262 061

OPTIONAL

Item Pos.	Part Number Codice	Description	Descrizione	Q.TY by Pump Q.TÀ per Pompa	NMT1220SR/LN	NMT1520SR/LN	NMT1220R/LN	NMT1520R/LN	NMT1820R/LN	NMT2120R/LN
50	9.853-426.0	*THREADED BRASS PLUG G1/4*	PREMONTATO TAPPO FORATO	1	•	•	•	•	•	•

TOOL KIT

Part Number Codice	Description	Descrizione	Q.TY by Pump Q.TÀ per Pompa	NMT1220SR/LN	NMT1520SR/LN	NMT1220R/LN	NMT1520R/LN	NMT1820R/LN	NMT2120R/LN
1.099-667.0	TOOL-KIT	TOOL-KIT	1	•	•	•	•	•	•
1.904-414.0	OIL SEAL EXTRACTOR TOOL-KIT	TOOL-KIT ESTRAZIONE PARAOLIO	1						

IMPORTANT **IMPORTANTE**

* ***Part available ONLY in kit***
Disponibile SOLO in kit

(…) **Parts pre-assembled**
Parti pre-assemblate

NESINPER | Distribucion y gestion tecnica Peru-Europa | www.nesinper.com | +51 998 262 061

PARTS LIST LISTA PARTI

Item Pos	*Part Number* Codice	*Description*	Descrizione	*KIT*	*Q.TY* Q.TÀ	*NMT1220SR/LN*	*NMT1520SR/LN*	*NMT1220R/LN*	*NMT1520R/LN*	*NMT1820R/LN*	*NMT2120R/LN*
1	9.850-375.0	*CRANKCASE*	CARTER		1						
2*		*PLUNGER OIL SEAL*	ANELLO RADIALE	E	3						
3*		*"O" RING Ø1.78X31.47*	"O" RING Ø1.78X31.47	A-C-G	3						
4*		*PRESSURE RING 20MM*	PRESSORE "U" Ø20	C-G	3						
5*		*LOW PRESSURE "U" SEAL, DIA.20MM*	ANELLO TENUTA "U" Ø20	A-C-G	3						
6*		*INTERMED. RING 20MM*	DIFFUSORE INTER. Ø20	C-G	3						
7*		*HIGH PRESSURE "U" SEAL, DIA.20MM*	ANELLO TENUTA "U" Ø20	A-C-G	3						
8*		*COPPER WASHER G1/2*	GUARNIZIONE RAME	G	1						
9*		*BRASS PLUG G1/2 NICKEL PLATED*	TAPPO G1/2 NICHELATO	G	1						
10*		*MANIFOLD HOUSING NICKEL PLATED*	TESTATA NICHELATA	G	1						
11*		*"O" RING Ø2.62X17.13*	"O" RING Ø2.62X17.13	B-G	6						
12*		*VALVE ASSEMBLY*	VALVOLA PREMONTATA	B-G	6						
13*		*"O" RING Ø2.62X20.29*	"O" RING Ø2.62X20.29	B-G-I	6						
14*		*VALVE PLUG NICKEL PLATED*	TAPPO VALVOLA NICHELATO	G-I	6	•	•	•	•	•	•
15*		*MANIFOLD STUD BOLT M8X65 8.8*	VITE M8X65 8.8 ZINCATA	G	8						
16*		*WASHER Ø8,5*	ROSETTA Ø8.5	G	16						
17*		*COPPER WASHER G3/8*	GUARNIZIONE RAME	G	1						
18*		*BRASS PLUG G3/8 NICKEL PLATED*	TAPPO G3/8 NICHELATO	G	2						
19*		*VALVE SEAT*	SEDE VALVOLA	B-G	6						
20*		*VALVE PLATE*	PIATTELLO VALVOLA	B-G	6						
21*		*VALVE SPRING*	MOLLA VALVOLA	B-G	6						
22*		*VALVE CAGE*	GABBIA VALVOLA	B-G	6						
23	9.851-501.0	*HEXAGONAL SCREW M8X18*	VITE M8X18		8						
24	9.850-626.0	*CLOSED BEARING HOUSING*	FLANGIA CHIUSA		1						
25*		*"O" RING Ø1.78X60.05*	"O" RING Ø1.78X60.05	F	2						
26	9.850-349.0	*ROLLER BEARING 33205*	CUSCINETTO A RULLI 33205		2						
27	9.850-175.0	*SINGLE - ENDED SHAFT*	ALBERO SEMPLICE P.D.F.		1			•			
	9.850-177.0	" " "	" " "		1				•		
	9.850-178.0	" " "	" " "		1	•				•	
	9.850-179.0	" " "	" " "		1						•
	9.850-180.0	" " "	" " "		1		•				
28	9.850-446.0	*CRANKSHAFT KEY*	CHIAVETTA		1						
29	9.851-286.0	*OIL DIP STICK*	TAPPO LIVELLO OLIO		1						
30*		*CRANKSHAFT SEAL*	ANELLO RADIALE	F	1	•	•	•	•	•	•
31	9.850-547.0	*SHIM*	DISTANZIALE		1						
32	9.850-625.0	*BEARING HOUSING*	FLANGIA		1						

NESINPER | Distribucion y gestion tecnica Peru-Europa | www.nesinper.com | +51 998 262 061

Item Pos	Part Number Codice	Description	Descrizione	KIT	Q.TY Q.TÀ	NMT1220SR/LN	NMT1520SR/LN	NMT1220R/LN	NMT1520R/LN	NMT1820R/LN	NMT2120R/LN
33*		PLUNGER NUT	DADO PISTONE	D-H	3						
34*		COPPER SPACER Ø 11.2/15X0.5	ROSETTA RAME Ø 1.2/15X0.5	D-H	3						
35*		PLUNGER 20MM	PISTONE Ø20	C	3						
36*		COPPER SPACER Ø 11.3/24X0.5	ROSETTA RAME Ø 1.3/24X0.5	C	3						
37*		"O" RING Ø1.78X7.66	"O" RING Ø1.78X7.66	D-H	3						
38*		TEFLON RING	ANELLO ANTIESTRUSIONE	D-H	3						
39*		PLUNGER ROD	ASTA PISTONE	H	3						
40*		CONNECTING ROD	BIELLA	H	3						
41*		CONNECTING ROD PIN	SPINOTTO	H	3	•	•	•	•	•	•
42*		SPRING WASHER Ø6	ROSETTA ELASTICA Ø6	H	6						
43*		CONNECTING ROD SCREW M6X30	VITE M6X30	H	6						
44*		"O" RING Ø 2.62X126.67	"O" RING Ø 2.62X126.67	F	1						
45	9.850-388.0	CRANKCASE COVER	COPERCHIO POSTERIORE		1						
46*		"O" RING Ø1.78X14	"O" RING Ø1.78X14	F	1						
47*		BRASS PLUG G 3/8	TAPPO G 3/8	F	1						
48*		SIGHT GLASS, G3/4	SPIA LIVELLO OLIO G3/4	F	1						
49	9.851-474.0	SCREW M6X16	VITE M6X16		4						

NESINPER | Soporte tecnico y comercial

Hidrolavadoras Nesinper S.A.C.

Deyvi Medrano Q. I Gestion tecnico-comercial I dmedrano@nesinper.com

WhatsApp PE: +51 998 262 061

info@nesinper.com I www.nesinper.com

Gestion tecnica Peru-Europa