Caratteristiche Tecniche

XLT I 2011

vers. Ø24

Technical Characteristics

Pump Pompa	Pressure Pressione		Volume Portata				RPM giri/min		Power Potenza			
			l/min		GPM				HP		kW	
	bar	PSI	50 Hz	60 Hz	50 Hz	60 Hz	50 Hz	60 Hz	50 Hz	60 Hz	50 Hz	60 Hz
XLT3020IS	200	2900	30	36	7.9	9.5	1000	1200	15.6	18.7	11.5	13.8
XLT3816IS	160	2320	38	46	10	12	1000	1200	15.9	19.0	11.7	14.0
XLT1530I	300	4350	15	18	3,96	4,75	1450	1740	11,5	13,8	8,5	10,2
XLT1830I	300	4350	18	22	4.8	5.8	1450	1740	13.7	16.4	10.1	12.1
XLT2230I	300	4350	22	26	5.8	7	1450	1740	16.6	19.9	12.2	14.6
XLT2530I	300	4350	25	30	6.6	7.9	1450	1740	19.2	23.0	14.1	16.2
XLT2730I	300	4350	27	32	7.1	8.5	1450	1740	20.5	24.6	15.1	18.1
XLT3025I	250	3625	30	36	7.9	9.5	1450	1740	19.3	23.2	14.2	17.0
XLT3325I	250	3625	33	40	8.7	10.4	1450	1740	21.4	25.7	15.7	18.8
XLT3517I	170	2465	35	42	9.2	11	1450	1740	15.2	18.2	11.2	13.4
XLT4017I	170	2465	40	48	10.6	12.7	1450	1740	17.0	20.4	12.5	15.0
XLT4317I	170	2465	43	52	11.4	13.7	1450	1740	19.1	22.9	14.1	16.9
XLT5015I	150	2175	50	60	13.2	15.8	1450	1740	18.8	22.6	13.8	16.6
XLT5415I	150	2175	54	65	14.3	17.2	1450	1740	21.2	25.4	15.6	18.7

NESINPER | Distribucion y gestion tecnica Peru-Europa
Hidrolavadoras Nesinper S.A.C.
Deyvi Medrano Q. | Gestion tecnico-comercial
WhatsApp PE: +51 998 262 061 | dmedrano@nesinper.com
info@nesinper.com | www.nesinper.com

Dimensioni d'ingombro

Overall dimensions

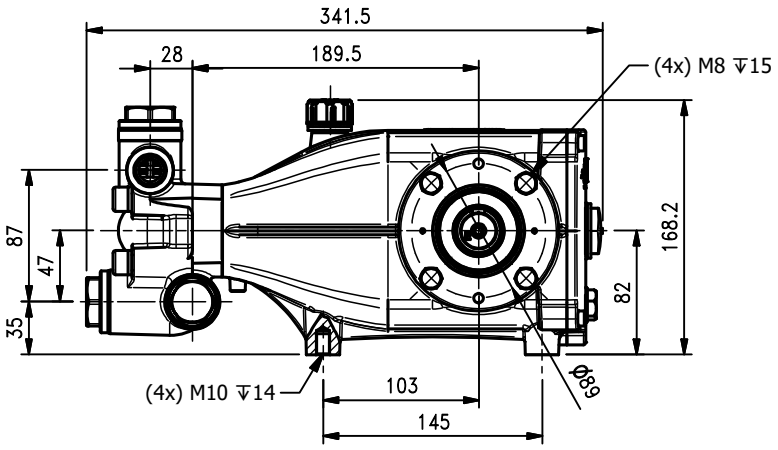

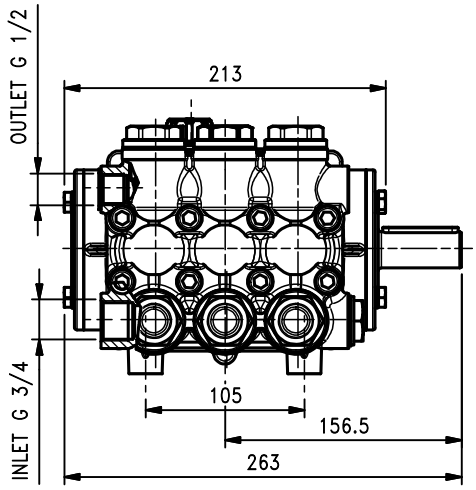

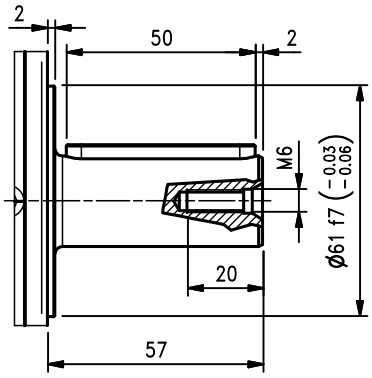

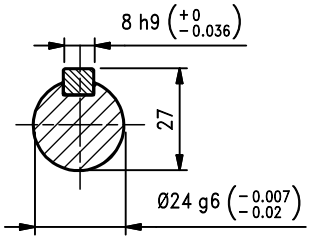

Lubrificazione: Olio SAE 10W-40
Capacità: 1.2 Litri
Peso pompa: 17.2 Kg

Rev. 11 04/2022

Lubrication: SAE 10W-40 Oil
Capacity: 1.2 Litres
Weight: 17.2 Kg

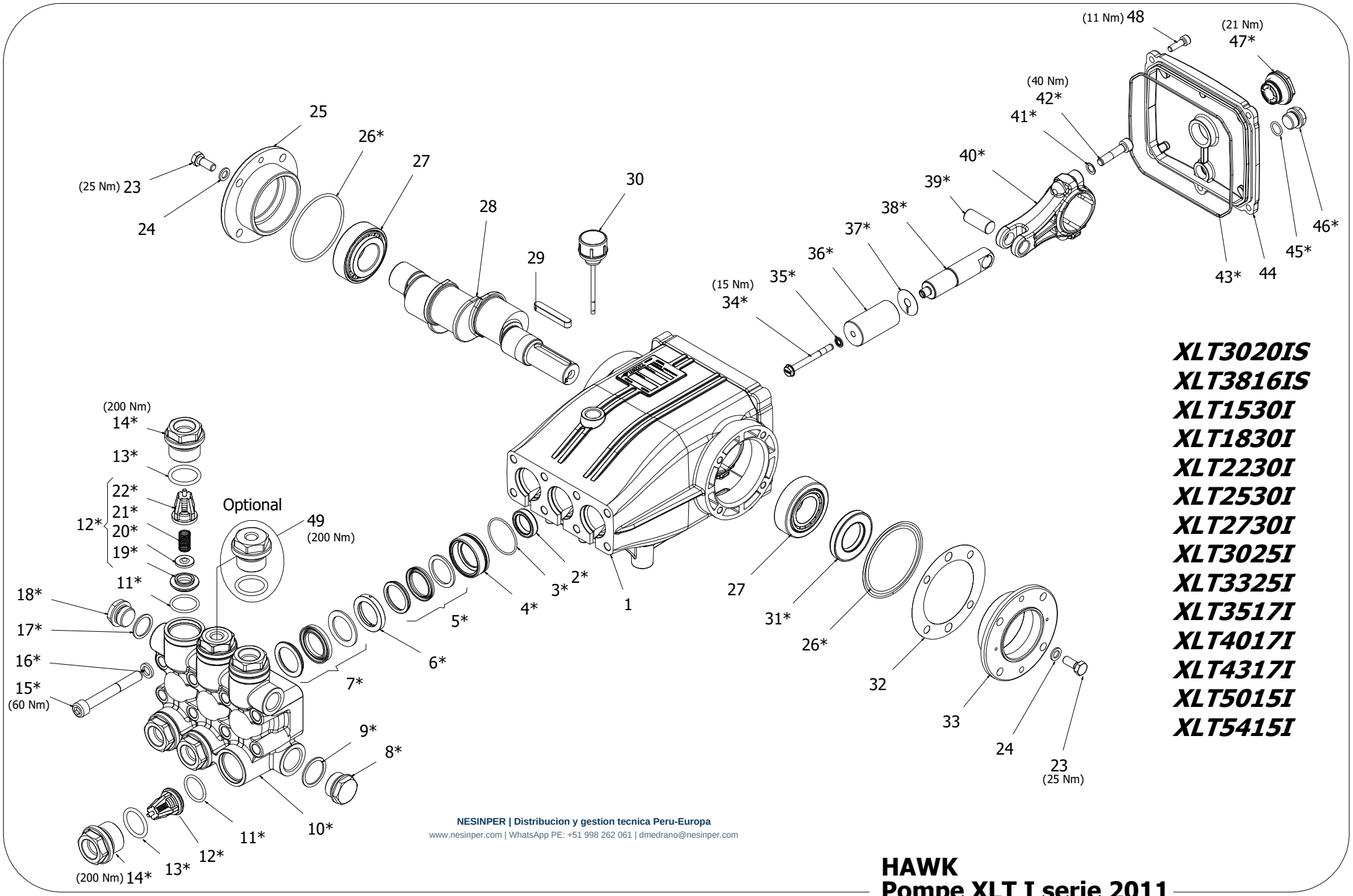

XLT3020IS
XLT3816IS
XLT1530I
XLT1830I
XLT2230I
XLT2530I
XLT2730I
XLT3025I
XLT3325I
XLT3517I
XLT4017I
XLT4317I
XLT5015I
XLT5415I

NESINPER | Distribucion y gestion tecnica Peru-Europa
www.nesinper.com | WhatsApp PE: +51 998 262 061 | dmedrano@nesinper.com

HAWK
Pompe XLT I serie 2011
XLT I pumps 2011 series

Rev. 11 04/2022

XLT I 2011 SERIES

ORDINARY MAINTENANCE KIT / KIT MANUTENZIONE ORDINARIA

KIT	*Item* Pos.	*Part Number* Codice	*Description*	Descrizione	*Q.TY by Pump* Q.TÀ per Pompa	*XLT7302O/S*	*XLT3816/S*	*XLT1530/*	*XLT1830/*	*XLT2230/*	*XLT2530/*	*XLT2730/*	*XLT3025/*	*XLT3325/*	*XLT3517/*	*XLT4017/*	*XLT4317/*	*XLT5015/*	*XLT5415/*
A	3- 5- 7	1.099-759.0	*PLUNGER SEALS DIA. 20 mm*	GUARNIZIONI PISTONE Ø20	1			•	•	•	•	•							
		1.099-769.0	*PLUNGER SEALS DIA. 22 mm*	GUARNIZIONI PISTONE Ø22									•	•					
		1.099-770.0	*PLUNGER SEALS DIA. 25 mm*	GUARNIZIONI PISTONE Ø25		•									•	•	•		
		1.099-771.0	*PLUNGER SEALS DIA. 28 mm*	GUARNIZIONI PISTONE Ø28			•											•	•
B	11- 12 (19 20- 21- 22) 13	1.905-686.0	*COMPLETE VALVE*	VALVOLA COMPLETA	1	•	•								•	•	•	•	•
	11- 12 (19 20- 21- 22) 13	1.905-687.0	*COMPLETE VALVE*	VALVOLA COMPLETA				•	•	•	•	•	•	•					

EXTRAORDINARY MAINTENANCE KIT / KIT MANUTENZIONE STRAORDINARIA

KIT	*Item* Pos.	*Part Number* Codice	*Description*	Descrizione	*Q.TY by Pump* Q.TÀ per Pompa	*XLT7302O/S*	*XLT3816/S*	*XLT1530/*	*XLT1830/*	*XLT2230/*	*XLT2530/*	*XLT2730/*	*XLT3025/*	*XLT3325/*	*XLT3517/*	*XLT4017/*	*XLT4317/*	*XLT5015/*	*XLT5415/*
C	3- 4- 5- 6- 7	1.905-670.0	*COMPLETE SEALS PACKING DIA. 20 mm*	PACCO COMPLETO GUARNIZIONI PISTONE Ø20	1			•	•	•	•	•							
		1.905-852.0	*COMPLETE SEALS PACKING DIA. 22 mm*	PACCO COMPLETO GUARNIZIONI PISTONE Ø22									•	•					
		1.905-853.0	*COMPLETE SEALS PACKING DIA. 25 mm*	PACCO COMPLETO GUARNIZIONI PISTONE Ø25		•									•	•	•		
		1.905-854.0	*COMPLETE SEALS PACKING DIA. 28 mm*	PACCO COMPLETO GUARNIZIONI PISTONE Ø28			•											•	•
D	34- 35- 36 37	1.099-763.0	*PLUNGER DIA. 20 mm*	PISTONE Ø20	3			•	•	•	•	•							
		1.099-776.0	*PLUNGER DIA. 22 mm*	PISTONE Ø22									•	•					
		1.099-777.0	*PLUNGER DIA. 25 mm*	PISTONE Ø25		•									•	•	•		
		1.099-778.0	*PLUNGER DIA. 28 mm*	PISTONE Ø28			•											•	•
E	2	1.099-766.0	*PLUNGER OIL SEALS*	ANELLI TENUTA OLIO ASTA	1	•	•	•	•	•	•	•	•	•	•	•	•	•	•

"Q.TY by Pump" => Necessary quantity to repair one pump
"Q.TA' per Pompa" => Quantità necessaria per riparare una pompa

EXTRAORDINARY MAINTENANCE KIT / KIT MANUTENZIONE STRAORDINARIA

KIT	*Item* Pos.	*Part Number* Codice	*Description*	Descrizione	*Q.TY by Pump* Q.TA' per Pompa	*XLT7302OIS*	*XLT3816IS*	*XLT1530I*	*XLT1830I*	*XLT2230I*	*XLT2530I*	*XLT2730I*	*XLT3025I*	*XLT3325I*	*XLT3517I*	*XLT4017I*	*XLT4317I*	*XLT5015I*	*XLT5415I*
F	26- 31- 43 45- 46- 47	1.905-613.0	*KIT CRANKCASE SEALS*	KIT TENUTE CARTER	1	•	•	•	•	•	•	•	•	•	•	•	•	•	•
G	3- 4- 5- 6- 7 8- 9- 10- 11 12 (19- 20 21- 22) 13 14- 15- 16 17- 18	1.099-781.0	*COMPLETE MANIFOLD 20*	TESTATA COMPLETA Ø20	1			•	•	•	•	•							
		1.099-782.0	*COMPLETE MANIFOLD 22*	TESTATA COMPLETA Ø22									•	•					
		1.099-783.0	*COMPLETE MANIFOLD 25*	TESTATA COMPLETA Ø25		•									•	•	•		
		1.099-784.0	*COMPLETE MANIFOLD 28*	TESTATA COMPLETA Ø28			•											•	•
H	38- 39- 40 41- 42	1.904-180.0	*CONNECTING ROD PLUNGER ROD ASSY*	PREMONTATO ASTA-BIELLA PISTONE	3	•	•	•	•	•	•	•	•	•	•	•	•	•	•
I	13- 14	1.904-260.0	*VALVE PLUG ASSY*	PREMONTATO TAPPO VAM	6	•	•								•	•	•	•	•
		1.904-262.0	*VALVE PLUG ASSY*	PREMONTATO TAPPO VAM				•	•	•	•	•	•	•					

NESINPER | Distribucion y gestion tecnica Peru-Europa
www.nesinper.com | WhatsApp PE: +51 998 262 061 | dmedrano@nesinper.com

"Q.TY by Pump" => Necessary quantity to repair one pump
"Q.TA' per Pompa" => Quantità necessaria per riparare una pompa

OPTIONAL

Item Pos.	Part Number Codice	Description	Descrizione	Q.TY by Pump Q.TÀ per Pompa	XLT73020IS	XLT3816IS	XLT1530I	XLT1830I	XLT2230I	XLT2530I	XLT2730I	XLT3025I	XLT3325I	XLT3517I	XLT4017I	XLT4317I	XLT5015I	XLT5415I
49	9.853-428.0	*THREADED BRASS PLUG G1/4*	PREMONTATO TAPPO FORATO	1	•	•								•	•	•	•	•
	9.853-427.0	*THREADED BRASS PLUG G1/4*	PREMONTATO TAPPO FORATO	1			•	•	•	•	•	•	•					

TOOL KIT

Part Number Codice	Description	Descrizione	Q.TY by Pump Q.TÀ per Pompa	XLT73020IS	XLT3816IS	XLT1530I	XLT1830I	XLT2230I	XLT2530I	XLT2730I	XLT3025I	XLT3325I	XLT3517I	XLT4017I	XLT4317I	XLT5015I	XLT5415I
1.099-665.0	TOOL-KIT	TOOL-KIT	1	•	•	•	•	•	•	•	•	•	•	•	•	•	•
1.905-659.0	OIL SEAL EXTRACTOR TOOL-KIT	TOOL-KIT ESTR. PARAOLIO	1														

NESINPER | Distribucion y gestion tecnica Peru-Europa
www.nesinper.com | WhatsApp PE: +51 998 262 061 | dmedrano@nesinper.com

IMPORTANT **IMPORTANTE**

* ***Part available ONLY in kit***
Disponibile SOLO in kit

(…) **Parts pre-assembled**
Parti pre-assemblate

PARTS LIST LISTA PARTI

Item Pos	*Part Number* Codice	*Description*	Descrizione	*KIT*	*Q.TY* Q.TÀ	*XLT7302OIS*	*XLT3816IS*	*XLT1530I*	*XLT1830I*	*XLT2230I*	*XLT2530I*	*XLT2730I*	*XLT3025I*	*XLT3325I*	*XLT3517I*	*XLT4017I*	*XLT4317I*	*XLT5015I*	*XLT5415I*
1	9.850-377.0	*CRANKCASE*	CARTER		1														
2*		*PLUNGER OIL SEAL*	ANELLO RADIALE	E	3	•	•	•	•	•	•	•	•	•	•	•	•	•	•
3*		*"O" RING Ø1.78X37.82*	"O" RING Ø1.78X37.82	A-C-G	3														
4*		*PRESSURE RING 20MM*	PRESSORE "U" Ø20	C-G	3			•	•	•	•	•							
		PRESSURE RING 22MM	PRESSORE "U" Ø22										•	•					
		PRESSURE RING 25MM	PRESSORE "U" Ø25			•									•	•	•		
		PRESSURE RING 28MM	PRESSORE "U" Ø28				•											•	•
5*		*LOW PRESSURE "U" SEAL, DIA.20MM*	ANELLO TENUTA "U" Ø20	A-C-G	3			•	•	•	•	•							
		LOW PRESSURE "U" SEAL, DIA.22MM	ANELLO TENUTA "U" Ø22										•	•					
		LOW PRESSURE "U" SEAL, DIA.25MM	ANELLO TENUTA "U" Ø25			•									•	•	•		
		LOW PRESSURE "U" SEAL, DIA.28MM	ANELLO TENUTA "U" Ø28				•											•	•
6*		*INTERMED. RING 20MM*	DIFFUSORE INTER. Ø20	C-G	3			•	•	•	•	•							
		INTERMED. RING 22MM	DIFFUSORE INTER. Ø22										•	•					
		INTERMED. RING 25MM	DIFFUSORE INTER. Ø25			•									•	•	•		
		INTERMED. RING 28MM	DIFFUSORE INTER. Ø28				•											•	•
7*		*HIGH PRESSURE "U" SEAL, DIA.20MM*	ANELLO TENUTA "U" Ø20	A-C-G	3			•	•	•	•	•							
		HIGH PRESSURE "U" SEAL, DIA.22MM	ANELLO TENUTA "U" Ø22										•	•					
		HIGH PRESSURE "U" SEAL, DIA.25MM	ANELLO TENUTA "U" Ø25			•									•	•	•		
		HIGH PRESSURE "U" SEAL, DIA.28MM	ANELLO TENUTA "U" Ø28				•											•	•
8*		*BRASS PLUG G 3/4*	TAPPO G 3/4	G	1	•	•	•	•	•	•	•	•	•	•	•	•	•	•
9*		*COPPER WASHER G 3/4*	GUARNIZIONE RAME G3/4	G	1														
10*		*MANIFOLD HOUSING 28/25*	TESTATA Ø28/25	G	1	•	•								•	•	•	•	•
		MANIFOLD HOUSING 22/20	TESTATA Ø22/20					•	•	•	•	•	•	•					
11*		*"O" RING Ø2.62X25.07*	"O" RING Ø2.62X25.07	B-G	6	•	•								•	•	•	•	•
		"O" RING Ø2.62X21.89	"O" RING Ø2.62X21.89					•	•	•	•	•	•	•					
12*		*VALVE ASSEMBLY*	VALVOLA PREMONTATA	B-G	6	•	•								•	•	•	•	•
		VALVE ASSEMBLY	VALVOLA PREMONTATA					•	•	•	•	•	•	•					
13*		*"O" RING Ø2.62X26.58*	"O" RING Ø2.62X26.58	B-G-I	6	•	•								•	•	•	•	•
		"O" RING Ø2.62X25.80	"O" RING Ø2.62X25.80					•	•	•	•	•	•	•					
14*		*VALVE PLUG*	TAPPO VALVOLA	G-I	6	•	•								•	•	•	•	•
		VALVE PLUG	TAPPO VALVOLA					•	•	•	•	•	•	•					
15*		*MANIFOLD STUD BOLT*	VITE M10X80 GEOMET	G	8	•	•	•	•	•	•	•	•	•	•	•	•	•	•
16*		*LOCK-WASHER*	ROSETTA ELASTICA	G	8														
17*		*COPPER WASHER G1/2*	GUARNIZIONE RAME G1/2	G	1														
18*		*BRASS PLUG G1/2*	TAPPO G1/2	G	1														

NESINPER | Distribucion y gestion tecnica Peru-Europa
www.nesinper.com | WhatsApp PE: +51 998 262 061 | dmedrano@nesinper.com

Item Pos	Part Number Codice	Description	Descrizione	KIT	Q.TY Q.TÀ	XLT7302O/S	XLT3816/S	XLT1530/	XLT1830/	XLT2230/	XLT2530/	XLT2730/	XLT3025/	XLT3325/	XLT3517/	XLT4017/	XLT4317/	XLT5015/	XLT5415/
19*		VALVE SEAT	SEDE VALVOLA	B-G	6	•	•								•	•	•	•	•
		VALVE SEAT	SEDE VALVOLA	B-G	6			•	•	•	•	•	•	•					
20*		VALVE PLATE	PIATTELLO VALVOLA	B-G	6														
21*		VALVE SPRING	MOLLA VALVOLA	B-G	6														
22*		VALVE CAGE	GABBIA VALVOLA	B-G	6														
23	9.851-503.0	HEXAGONAL SCREW	VITE M8X20		8														
24	9.851-114.0	WASHER DIA. 8.5	ROSETTA Ø8.5		8	•	•	•	•	•	•	•	•	•	•	•	•	•	•
25	9.850-620.0	CLOSED BEARING HOUSING	FLANGIA CHIUSA		1														
26*		"O" RING Ø2.62X71.12	"O" RING Ø2.62X71.12	F	2														
27	9.850-347.0	ROLLER BEARING	CUSCINETTO A RULLI		2														
28	9.850-194.0	CRANKSHAFT DIA. 24 MM	ALBERO Ø24		1				•										
	9.850-192.0	" " " "	" "							•					•				
	9.850-193.0	" " " "	" "								•		•			•		•	
	9.850-191.0	" " " "	" "			•	•					•		•			•		•
	9.850-222.0	" " " "	" "					•											
29	9.850-447.0	CRANKSHAFT KET	CHIAVETTA		1														
30	9.851-287.0	OIL DIP STICK	TAPPO LIVELLO OLIO		1														
31*		CRANKSHAFT SEAL	ANELLO RADIALE	F	1														
32	9.850-546.0	SHIM	DISTANZIALE		1	•	•	•	•	•	•	•	•	•	•	•	•	•	•
33	9.850-610.0	BEARING HOUSING	FLANGIA APERTA		1														
34*		PLUNGER BOLT	VITE PISTONE	D	3														
35*		BONDED SEAL	BONDED SEAL	D	3														
36*		PLUNGER DIA. 20 MM	PISTONE Ø20	D	3			•	•	•	•	•							
		PLUNGER DIA. 22 MM	PISTONE Ø22	D									•	•					
		PLUNGER DIA. 25 MM	PISTONE Ø25	D		•									•	•	•		
		PLUNGER DIA. 28 MM	PISTONE Ø28	D			•											•	•
37*		COPPER SPACER	ROSETTA RAME	D	3														
38*		PLUNGER ROD	ASTA PISTONE	H	3														
39*		CONNECTING ROD PIN	SPINOTTO	H	3														
40*		CONNECTING ROD	BIELLA	H	3														
41*		SPRING WASHER	ROSETTA ELASTICA Ø8	H	6														
42*		CONNECTING ROD SCREW	VITE BIELLA	H	6														
43*		"O" RING Ø2.62X152.07	"O" RING Ø2.62X152.07	F	1	•	•	•	•	•	•	•	•	•	•	•	•	•	•
44	9.850-389.0	CRANKCASE COVER	COPERCHIO		1														
45*		"O" RING Ø1.78X14.00	"O" RING Ø1.78X14.00	F	1														
46*		BRASS PLUG G 3/8	TAPPO OTTONE G 3/8	F	1														
47*		SIGHT GLASS, G 3/4	SPIA LIVELLO OLIO	F	1														
48	9.851-474.0	COVER SCREW	VITE COPERCHIO		5														