Caratteristiche Tecniche

GXT HT 2017

Technical Characteristics

Pump Pompa	Pressure Pressione		Volume Portata				RPM giri/min		Power Potenza			
			l/min		GPM				HP		kW	
	bar	PSI	50 Hz	60 Hz	50 Hz	60 Hz	50 Hz	60 Hz	50 Hz	60 Hz	50 Hz	60 Hz
GXT1015SHT	150	2175	100	120	25,8	31	1000	1200	38,0	45,6	28,0	33,6
GXT1215SHT	150	2175	120	144	31,3	37,6	1000	1200	46,5	55,8	34,2	41,0
GXT1513SHT	130	1885	150	180	39,2	47	1000	1200	50,6	60,7	37,2	44,6
GXT1711SHT	110	1595	170	204	44,9	53,9	1000	1200	47,5	57,0	35,0	42,0

NESINPER | Distribucion y gestion tecnica Peru-Europa
Hidrolavadoras Nesinper S.A.C.
Deyvi Medrano Q. | Gestion tecnico-comercial
WhatsApp PE: +51 998 262 061 | dmedrano@nesinper.com

info@nesinper.com | www.nesinper.com

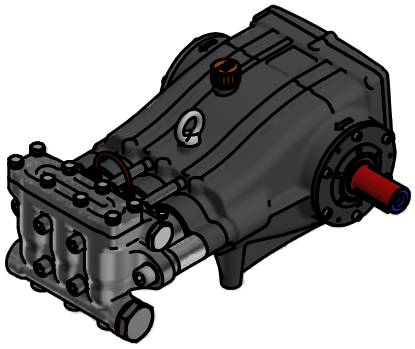

Dimensioni d'ingombro

Overall dimensions

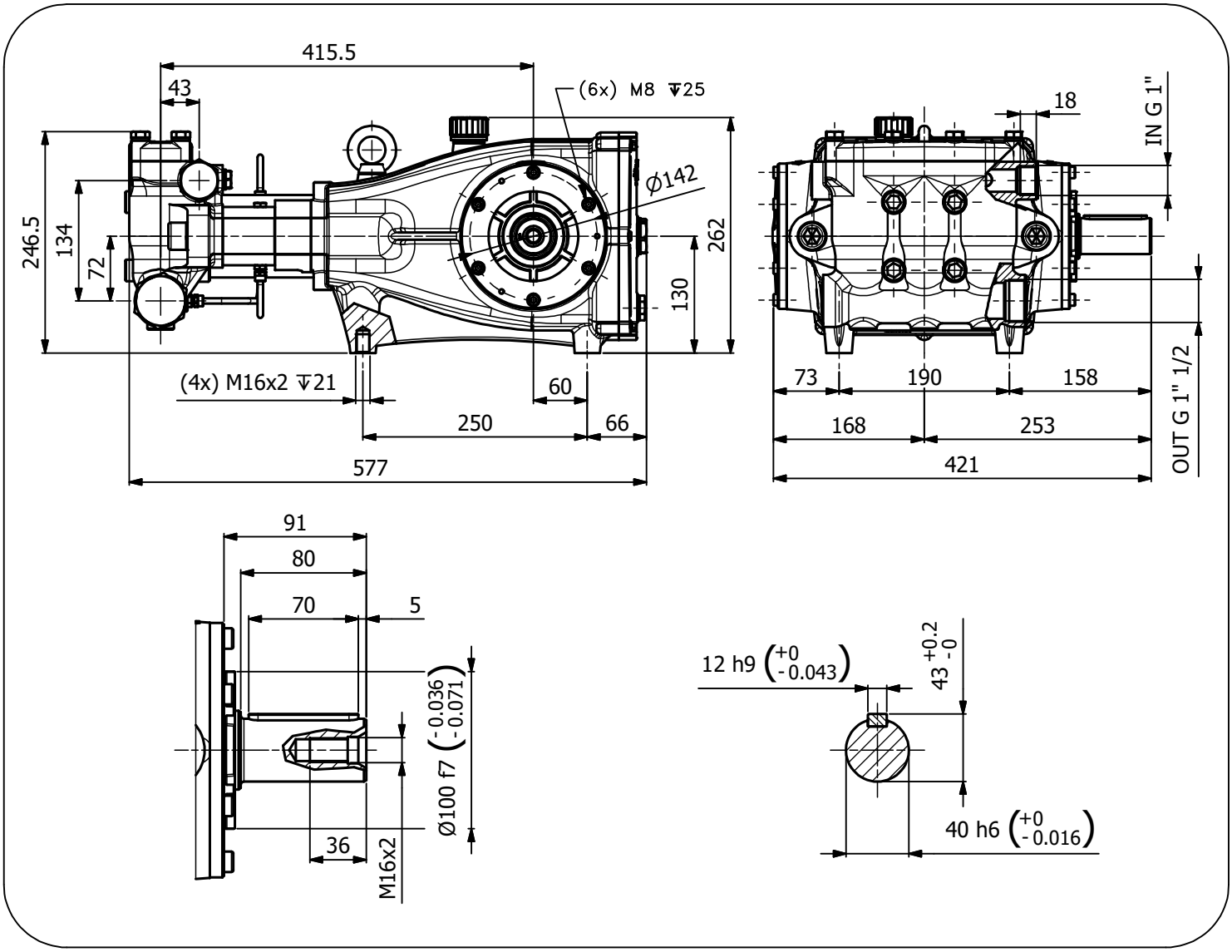

Lubrificazione: Olio SAE 10W-40
Capacità: 5,5 Litri
Peso pompa: 67,5 Kg

Rev. 4 11-21

Lubrication: SAE 10W-40 Oil
Capacity: 5,5 Litres
Weight: 67,5 Kg

(*) disponibili solo in kit
available only in kit

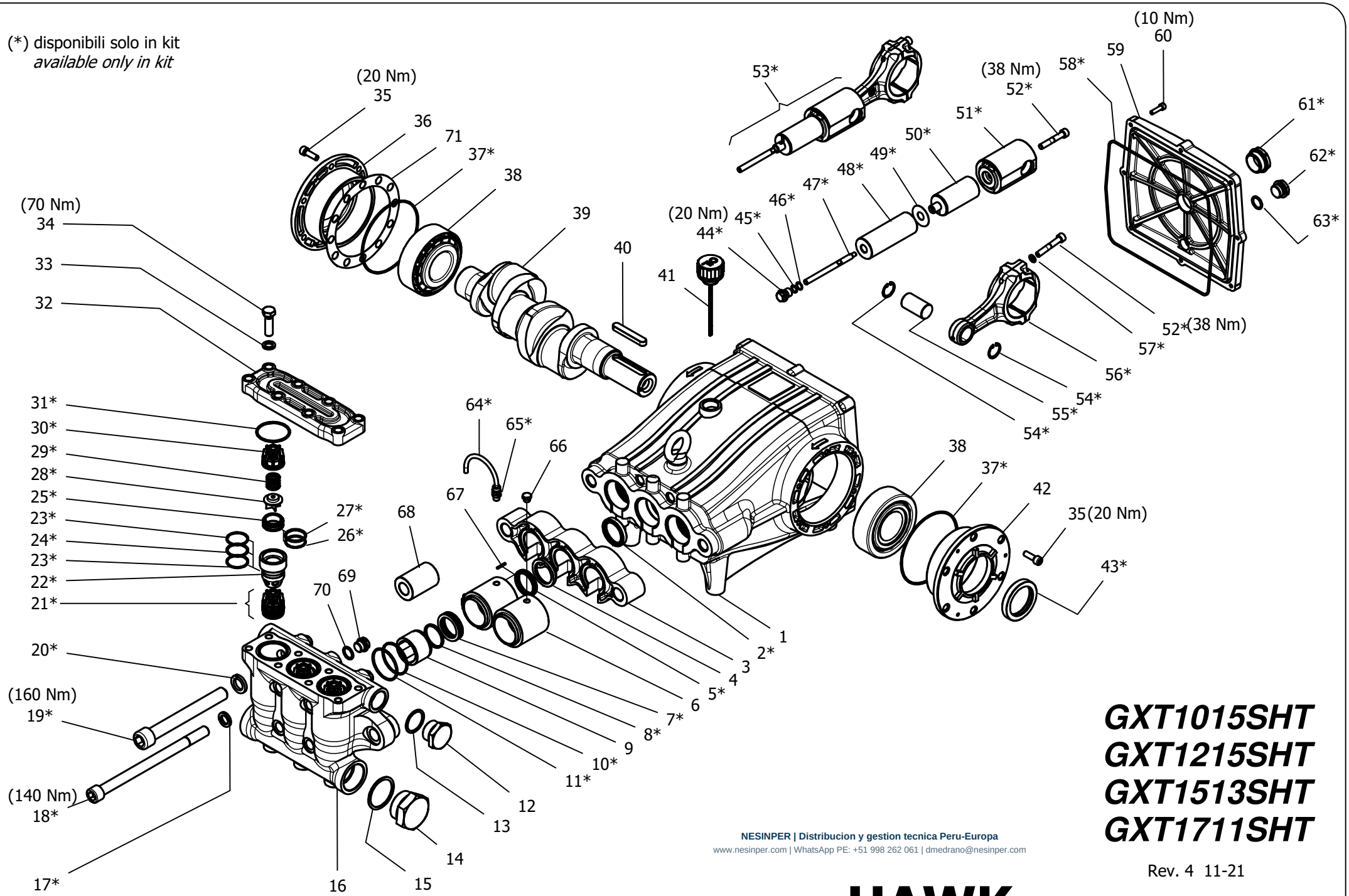

GXT1015SHT
GXT1215SHT
GXT1513SHT
GXT1711SHT

NESINPER | Distribucion y gestion tecnica Peru-Europa
www.nesinper.com | WhatsApp PE: +51 998 262 061 | dmedrano@nesinper.com

Rev. 4 11-21

HAWK

serie GXT HT 2017

GXT HT SERIES 2017

MAINTENANCE KIT / KIT MANUTENZIONE

KIT	*Item* - Pos	*Part Number* - Codice	*Description*	Descrizione	*Q.TY per pump* - Q.TÀ per pompa	*GXT1015SHT*	*GXT1215SHT*	*GXT1513SHT*	*GXT1711SHT*
A	5- 7- 8- 9- 10- 11	9.853-354.0	*PISTON SEAL PACKING Ø36*	GUARNIZIONI PISTONE Ø36	1	•	•	•	•
B	43- 44- 45- 47- 49	1.904-473.0	*PLUNGER Ø36*	PISTONE Ø36	3				
C	37- 43- 58- 61 62- 63	1.904-474.0	*KIT CRANCKASE SEALS*	KIT TENUTE CARTER	1				
D	17- 18- 19- 20	1.904-472.0	*MANIFOLD SCREWS*	VITI TESTATA	1				
E	44- 45- 46- 49- 52 53- 54- 55- 56- 57	1.904-475.0	*PLUNGER ROD-CONNECTING ROD*	ASTA PISTONE-BIELLA	3	•	•		
		1.904-879.0	*PLUNGER ROD-CONNECTING ROD*	ASTA PISTONE-BIELLA	3			•	•
F	64- 65	1.904-477.0	*COMPLETE CIRCULATION PIPES*	TUBI RICIRCOLO	1	•	•	•	•
G	21 *(25- 26- 27- 28 29- 30)* 22- 23 24- 31	1.904-470.0	*COMPLETE VALVE*	VALVOLE COMPLETE	1				
H	21 *(25- 26- 27 28- 29- 30)* 23 24- 31	1.904-471.0	*VALVE*	VALVE	1				
I	2	1.904-478.0	*PLUNGER OIL SEALS*	TENUTE OLIO ASTA PISTONE	1				

"Q.TY per pump" => Necessary quantity to repair one pump
"Q.TA' per pompa" => Quantità necessaria per riparare una pompa

IMPORTANT **IMPORTANTE**

* ***Part available ONLY in kit***
Disponibile SOLO in kit

(…) **Parts pre-assembled**
Parti pre-assemblate

NESINPER | Distribucion y gestion tecnica Peru-Europa | www.nesinper.com | +51 998 262 061

PARTS LIST LISTA PARTI

Item Pos	*Part Number* Codice	*Description*	Descrizione	*Kit*	*Q.TY* Q.TÀ	*GXT1020SHT*	*GXT1215SHT*	*GXT1515SHT*	*GXT1712SHT*
1	*9.853-880.0*	*CRANCKCASE*	CARTER		1				
*2**		OIL SEAL HNBR	ANELLO RADIALE HNBR	I	3				
3	*9.850-361.0*	*SPACER*	DISTANZIALE CARTER		1				
4	*9.851-930.0*	*SUPPORT RING Ø36*	PRESSORE Ø36		3				
*5**		*"U" LP SEAL HT Ø36*	TENUTA BASSA PRESSIONE HT Ø36	A	3				
6	*9.853-380.0*	*INTERMEDIATE RING Ø36*	DIFFUSORE Ø36		3				
*7**		*"U" HP SEAL HT Ø36*	TENUTA ALTA PRESSIONE HT Ø36	A	3				
*8**		*SCRAPER Ø36*	RASCHIATORE PISTONE Ø36	A	3				
*9**		*BUSH GUIDE Ø36*	BOCCOLA GUIDA Ø36	A	3				
*10**		*BACK RING OR3200*	ANELLO ANTIESTR. OR3200	A	3				
*11**		*O-RING 3200 – NBR90*	O-RING 3200 – NBR90	A	3				
12	*9.851-356.0*	*PLUG G1"*	TAPPO G1"		1				
13	*9.850-752.0*	*COPPER WASHER G1"*	GUARNIZIONE G1"		1				
14	*9.853-383.0*	*PLUG G1" 1/2*	TAPPO G1" 1/2		1				
15	*9.850-753.0*	*COPPER WASHER G1" ½*	GUARNIZIONE G1" 1/2		1				
16	*9.853-384.0*	*MANIFOLD*	TESTATA		1				
*17**		*WASHER M16*	ROSETTA M16	D	4				
*18**		*SCREW M16x240*	VITE TCEI M16x240	D	4				
*19**		*SCREW M20x170*	VITE TCEI M20x170	D	2	•	•	•	•
*20**		*WASHER M20*	ROSETTA M20	D	2				
*21**		*VALVE ASSEMBLY*	PREMONATATO VALVOLA	G - H	6				
*22**		*VALVE SPACER*	DISTANZIALE VALVOLA	G	3				
*23**		*BACK RING OR3118*	ANELLO ANTIESTR. OR3118	G - H	6				
*24**		*O-RING 3118 – NBR90*	O-RING 3118 – NBR90	G - H	3				
*25**		*VALVE SEAT*	SEDE VALVOLA	G - H	6				
*26**		*BACK RING OR3112*	ANELLO ANTIESTR. OR3112	G - H	6				
*27**		*O-RING 3112 – NBR90*	O-RING 3112 – NBR90	G - H	6				
*28**		*VALVE PLATE*	PIATTELLO VALVOLA	G - H	6				
*29**		*SPRING*	MOLLA	G - H	6				
*30**		*VALVE CAGE*	GABBIA VALVOLA	G - H	6				
*31**		*O-RING 3193 – NBR90*	O-RING 3193 – NBR90	G - H	3				
32	*9.853-378.0*	*MANIFOLD COVER*	COPERCHIO TESTATA		1				
33	*9.851-140.0*	*WASHER M12*	ROSETTA M12		8				
34	*9.851-518.0*	*SCREW M12x40*	VITE TE M12x40		8				
35	*9.851-468.0*	*SCREW M8x25*	VITE TCEI M8x25		12				
36	*9.850-646.0*	*CLOSED HOUSING*	FLANGIA CHIUSA		1				
*37**		*O-RING 3475 – NBR70*	O-RING 3475 – NBR70	C	2				

NESINPER | Distribucion y gestion tecnica Peru-Europa | www.nesinper.com | +51 998 262 061

Item Pos	Part Number Codice	Description	Descrizione	Kit	Q.TY Q.TÀ	GXT1020SHT	GXT1215SHT	GXT1515SHT	GXT1712SHT
38	9.850-353.0	BEARING	CUSCINETTO		2	•	•	•	•
39	9.853-844.0	CRANKSHAFT "1"	ALBERO "1"		1				•
	9.851-915.0	CRANKSHAFT "B"	ALBERO "B"		1	•			
	9.853-097.0	CRANKSHAFT "E"	ALBERO "E"		1		•		
	9.853-845.0	CRANKSHAFT "3"	ALBERO "3"		1			•	
40	9.850-449.0	CRANKSHAFT KEY	CHIAVETTA		1	•	•	•	•
41	9.851-284.0	OIL DIP STICK G3/4	TAPPO SFIATO OLIO G3/4		1				
42	9.850-645.0	BEARING HOUSING	FLANGIA APERTA		1				
43*		OIL SEAL	ANELLO RADIALE	C	1				
44*		PLUNGER NUT	DADO PISTONE	B - E	3				
45*		O-RING 2037 – NBR70	O-RING 2037 – NBR70	B - E	3				
46*		BACK RING OR2037	ANELLO ANTIESTR. OR2037	B - E	3				
47*		PLUNGER SCREW	TIRANTE PISTONE	E	3				
48*		PLUGER Ø36	PISTONE Ø36	B	3				
49*		PLUGER WASHER	ROSETTA PISTONE	B - E	3				
50*		PLUNGER ROD SPACER	DISTANZIALE ASTA	E	3				
51*		PLUNGER ROD	ASTA PATTINO	E	3				
52*		SCREW M8x50	VITE TCEI M8x50	E	9				
53*		ASSEMBLY PLUNGER ROD	PREMONATATO ASTA PISTONE	E	3				
54*		SEEGER	ANELLO SEEGER	E	6				
55*		CONNECTING ROD PIN	SPINOTTO	E	3				
56*		CONNECTING ROD	BIELLA	E	3	•	•		
		CONNECTING ROD	BIELLA	E	3			•	•
57*		WASHER M8	ROSETTA ELASTICA M8	E	6	•	•	•	•
58*		O-RING Ø2,62x255 - NBR90	O-RING Ø2,62x255 - NBR90	C	1				
59	9.850-395.0	CRANCKCASE COVER	COPERCHIO CARTER		1				
60	9.851-480.0	SCREW M6x22	VITE TCEI M6x22		8				
61*		SIGHT GLASS G1"	SPIA LIVELLO G1"		1				
62*		PLUG G1/2	TAPPO G1/2	C	1				
63*		O-RING 3068 - NBR70	O-RING 3068 - NBR70	C	1				
64*		RED RILSAN PIPE 6/4	TUBO RILSAN 6/4 ROSSO	F	3				
65*		FITTING G1/8-6/4	RACCORDO G1/8-6/4	C	6				
66	9.851-353.0	PLUG G1/8	TAPPO G1/8		1				
67	9.851-256.0	PIN	SPINA CILINDRICA		3				
68	9.853-875.0	NICKEL PLATED SPACER	DISTANZIALE TESTATA NICHELATO		2				
69	9.851-346.0	PLUG G3/8	TAPPO G3/8		3				
70	9.850-747.0	COPPER WASHER G3/8	GUARNIZIONE RAME G3/8		3				
71	9.850-549.0	SHIM	DISTANZIALE FLANGIA		1				

NESINPER | Soporte tecnico y comercial

Hidrolavadoras Nesinper S.A.C.

Deyvi Medrano Q. | Gestion tecnico-comercial | dmedrano@nesinper.com

WhatsApp PE: +51 998 262 061

info@nesinper.com | www.nesinper.com

Gestion tecnica Peru-Europa

NESINPER | Distribucion y gestion tecnica Peru-Europa | www.nesinper.com | +51 998 262 061