Caratteristiche Tecniche

MXT HT 2015

Technical Characteristics

Pump Pompa	Pressure Pressione		Volume Portata				RPM giri/min		Power Potenza			
			l/min		GPM				HP		kW	
	bar	PSI	50 Hz	60 Hz	50 Hz	60 Hz	50 Hz	60 Hz	50 Hz	60 Hz	50 Hz	60 Hz
MXT1015HT	150	2175	100	120	25,9	31,1	1450	1740	37,7	45,2	27,7	33,2
MXT8515HT	150	2175	85	102	22,2	26,6	1450	1740	32,3	38,8	23,8	28,6
MXT7015HT	150	2175	70	84	18,5	22,2	1450	1740	26,9	32,3	19,8	23,8

NESINPER | Distribucion y gestion tecnica Peru-Europa
Hidrolavadoras Nesinper S.A.C.
Deyvi Medrano Q. I Gestion tecnico-comercial
WhatsApp PE: +51 998 262 061 I dmedrano@nesinper.com

info@nesinper.com I www.nesinper.com

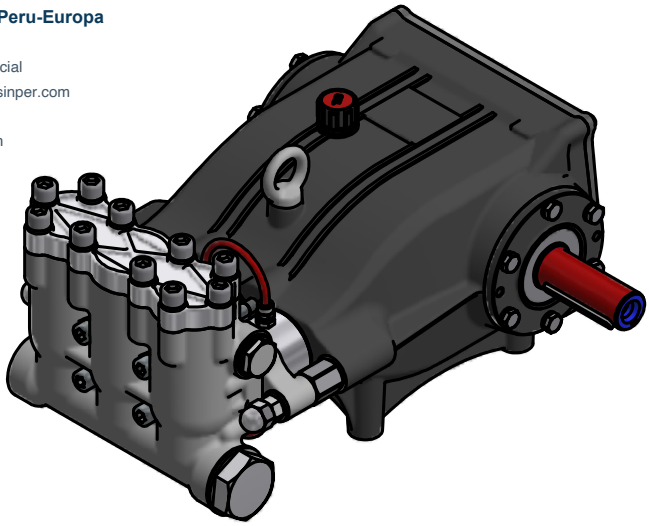

Dimensioni d'ingombro

Overall dimensions

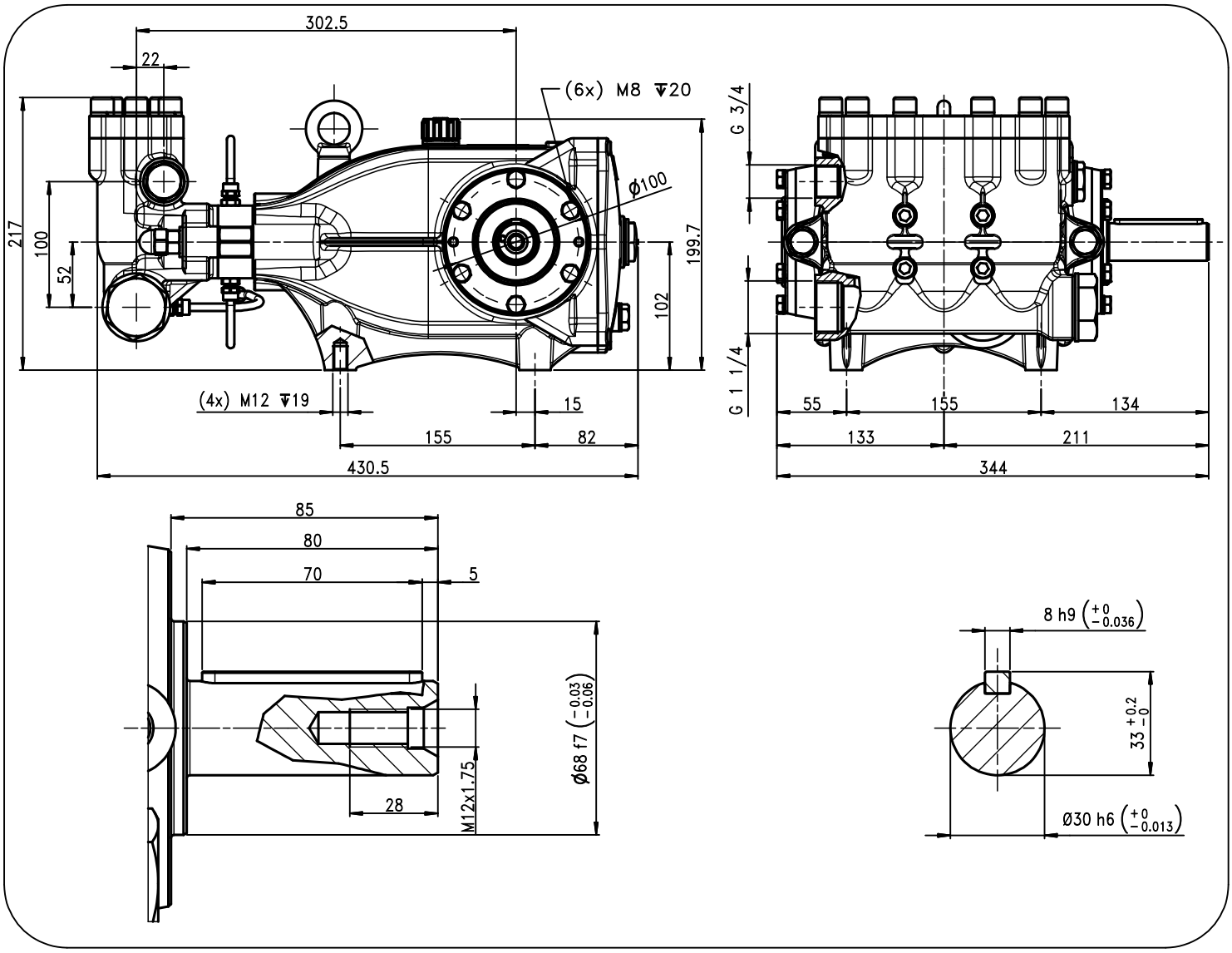

Lubrificazione: Olio SAE 10W-40
Capacità: 2,3 Litri
Peso pompa: 28,5 Kg

Rev. 6 09-21

Lubrication: SAE 10W-40 Oil
Capacity: 2,3 Litres
Weight: 28,5 Kg

(*) disponibili solo in kit
available only in kit

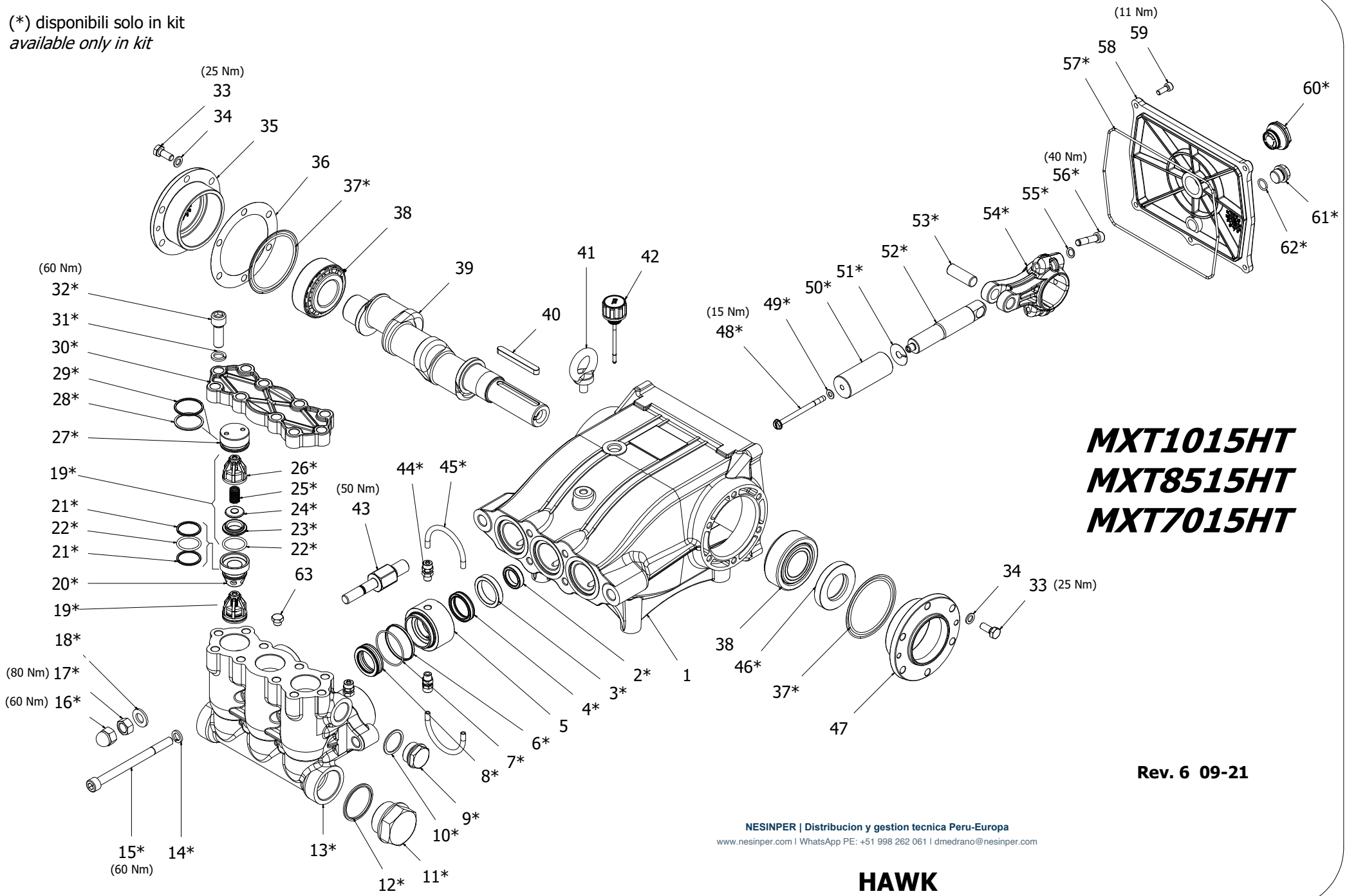

MXT1015HT
MXT8515HT
MXT7015HT

Rev. 6 09-21

NESINPER | Distribucion y gestion tecnica Peru-Europa
www.nesinper.com I WhatsApp PE: +51 998 262 061 I dmedrano@nesinper.com

HAWK
serie MXT HT
MXT HT series

MXT HT SERIES 2015

ORDNARY MAINTENANCE KIT / KIT MANUTENZIONE ORDINARIA

KIT	*Item* Pos	*Part Number* Codice	*Description*	Descrizione	*Q.TY per pump* - Q.TÀ per pompa	*MXT1015HT*	*MXT8515HT*	*MXT7015HT*
A	4- 6- 7- 8	1.099-868.0	*PISTON SEAL PACKING*	GUARNIZIONI PISTONE	1	•	•	•
B	19 *(22-23-24-25 26)* 21- 22- 28- 29	1.099-802.0	*VALVE*	VALVOLE	1			

EXTRAORDINARY MAINTENANCE KIT / KIT MANUTENZIONE STRAORDINARIA

KIT	*Item* Pos	*Part Number* Codice	*Description*	Descrizione	*Q.TY per pump* - Q.TÀ per pompa	*MXT1015HT*	*MXT8515HT*	*MXT7015HT*
C	19 *(22-23-24-25 26)* 20- 21- 22- 28- 29	1.099-804.0	*COMPLETE VALVE*	VALVOLE COMPLETE	1			
D	2	1.905-545.0	*PLUNGER OIL SEALS*	TENUTE OLIO ASTA PISTONE	1			
E	48- 49- 50- 51	1.099-803.0	*PLUNGER*	PISTONE	3			
F	37- 46- 57- 60- 61 62	1.099-805.0	*KIT CRANCKASE SEALS*	KIT TENUTE CARTER	1			
G	14- 15- 16- 17- 18	1.904-451.0	*MANIFOLD SCREWS*	VITI TESTATA	1	•	•	•
H	52- 53- 54 -55- 56	1.904-428.0	*PLUNGER ROD-CONNECTING ROD*	ASTA PISTONE-BIELLA	3			
I	44- 45	1.904-456.0	*COMPLETE CIRCULATION PIPES*	TUBI RICIRCOLO	1			
L	3- 4- 5- 6- 7- 8	1.099-869.0	*COMPLETE SEAL PACKING*	KIT GUARNIZIONI COMPLETO	1			
M	9- 10- 11- 12- 13 27- 30- 31- 32	1.099-870.0	*CYLINDER HEAD KIT*	KIT TESTATA	1			

"Q.TY by Pump" => Necessary quantity to repair one pump
"Q.TA' per Pompa" => Quantità necessaria per riparare una pompa

Part number Codice	*Description*	*Descrizione*
1.099-669.0	*TOOL KIT*	*TOOL KIT*
1.904-418.0	*TOOL KIT EXTRAORDINARY*	*TOOL KIT STRAORDINARIA*

IMPORTANT **IMPORTANTE**

* ***Part available ONLY in kit***
Disponibile SOLO in kit

(...) Parts pre-assembled
Parti pre-assemblate

NESINPER | Distribucion y gestion tecnica Peru-Europa | www.nesinper.com | +51 998 262 061

PARTS LIST LISTA PARTI

Item Pos	*Part Number* Codice	*Description*	Descrizione	*KIT*	*Q.TY* Q.TÀ	*MXT1015HT*	*MXT8515HT*	*MXT7015HT*
1	9.850-373.0	*CARTER*	CARTER		1			
2*		*PLUNGER OIL SEAL*	ANELLO RADIALE	D	3			
3*		*SUPPORT RING*	PRESSORE	L	3			
4*		*"U" SEAL*	GUARN. "U"	A – L	3			
5*		*INTERMED. RING*	DIFFUSORE	L	3			
6*		*BACK RING*	ANELLO ANTIESTR.	A – L	3			
7*		*O-RING*	O-RING	A – L	3			
8*		*"U" SEAL*	GUARN. "U"	A - L	3			
9*		*BRASS PLUG G3/4"*	TAPPO G3/4	M	1			
10*		*COPPER SPACER G3/4"*	GUARNIZIONE G3/4"	M	1			
11*		BRASS PLUG G1" 1/4	TAPPO G1" 1/4	M	1			
12*		*BONDED SEAL G 1" 1/4 NBR*	BONDED SEAL G 1" 1/4 NBR	M	1			
13*		*MANIFOLD HOUSING*	TESTATA OTTONE Ø30	M	1			
14*		*SPRING WASHER*	ROSETTA ELAST.	G	4			
15*		*MANIFOLD HOUSING SCREW*	VTCEI M10 x 130 ISO 4762-p	G	4			
16*		*NUT CAP*	DADO	G	2			
17*		*NUT*	DADO M12 UNI5588	G	2			
18*		*WASHER*	ROSETTA	G	2			
19*		*VALVE ASSEMBLY*	VALVOLA PREMONTATA	B – C	6	•	•	•
20*		*VALVE CAGE*	GABBIA VAM IMPILATA	C	3			
21*		*BACK RING*	ANELLO ANTIESTR.	B – C	6			
22*		*O-RING*	O-RING	B – C	9			
23*		*VALVE SEAT*	SEDE VAM	B – C	6			
24*		*VALVE PLATE*	PIATTELLO VAM	B – C	6			
25*		*VALVE SPRING*	MOLLA VAM	B – C	6			
26*		*VALVE CAGE*	GABBIA VAM	B – C	6			
27*		*VALVE SPACER CAP*	DISTANZIALE TAPPO VAM	M	3			
28*		*O-RING*	O-RING	B – C	3			
29*		*BACK RING*	ANELLO ANTIESTR.	B – C	3			
30*		*MANIFOLD HOUSING COVER*	COPERCHIO TESTATA	M	1			
31*		*WASHER*	ROSETTA	M	10			
32*		*COVER SCREW*	VITE COPERCHIO TESTATA	M	10			
33	9.851-503.0	*BEARING HOUSING SCREW*	VITE FLANGIA CUSCINETTI		12			
34	9.851-114.0	*WASHER*	ROSETTA M8 UNI 6592V		12			
35	9.850-641.0	*BEARING HOUSING*	FLANGIA CHIUSA		1			
36	9.850-556.0	*SHIM 0,1mm*	DISTANZIALE FLANGIA 0,1mm		1			
	9.850-557.0	*SHIM 0,05mm*	DISTANZIALE FLANGIA 0,05mm		1			
37*		*O-RING*	O-RING	F	2			

NESINPER | Distribucion y gestion tecnica Peru-Europa | www.nesinper.com | +51 998 262 061

Item Pos	Part Number Codice	Description	Descrizione	KIT	Q.TY Q.TÀ	MXT1015HT	MXT8515HT	MXT7015HT
38	9.851-963.0	ROLLER BEARING	CUSCINETTO		2	•	•	•
39	9.850-229.0	CRANKSHAFT SPTO Ø30	ALBERO SPTO Ø30		1	•		
	9.850-231.0	CRANKSHAFT SPTO Ø30	ALBERO SPTO Ø30		1		•	
	9.850-232.0	CRANKSHAFT SPTO Ø30	ALBERO SPTO Ø30		1			•
40	9.850-450.0	CRANKSHAFT KEY	LINGUETTA		1	•	•	•
41	9.851-457.0	EYEBOLT	GOLFARE		1			
42	9.851-287.0	OIL DIP STICK	TAPPO SFIATO OLIO		1			
43	9.850-555.0	MANIFOLD HOUSING SPACER	TIRANTE TESTATA		2			
44*		FITTING	RACCORDO	I	6			
45*		RED PIPE	TUBO ROSSO	I	4			
46*		PLUNGER OIL SEAL	ANELLO RADIALE	F	1			
47	9.850-642.0	BEARING HOUSING	FLANGIA APERTA		1			
48*		PLUNGER INOX SCREW	VITE INOX PISTONE	E	3			
49*		PLUNGER COPPER SPACER	ROSETTA RAME	E	3			
50*		PLUNGER	PISTONE	E	3			
51*		COPPER SPACER	ROSETTA PISTONE	E	3			
52*		PLUNGER ROD	ASTA GUIDA PISTONE	H	3			
53*		CONNECTING ROD PIN	SPINOTTO	H	3			
54*		CONNECTING ROD	BIELLA	H	3			
55*		SCHNORR WASHER	ROSETTA SCHNORR	H	6			
56*		CONNECTING ROD SCREW	VITE BIELLA	H	6			
57*		O-RING	O-RING	F	1			
58	9.850-393.0	CRANKCASE COVER	COPERCHIO POSTERIORE		1			
59	9.851-474.0	COVER SCREW	VITE COPERCHIO		5			
60*		SIGHT GLASS G 3/4”	SPIA LIVELLO OLIO G3/4	F	1			
61*		BRASS PLUG G3/8"	TAPPO G3/8"	F	1			
62*		O-RING	O-RING	F	1			
63	9.851-353.0	CUP	TAPPO		1			

NESINPER | Soporte tecnico y comercial

Hidrolavadoras Nesinper S.A.C.

Deyvi Medrano Q. I Gestion tecnico-comercial I dmedrano@nesinper.com

WhatsApp PE: +51 998 262 061

info@nesinper.com I www.nesinper.com

Gestion tecnica Peru-Europa