Caratteristiche Tecniche

XXT HT I 2014

Technical Characteristics

Pump Pompa	Pressure Pressione		Volume Portata				RPM giri/min		Power Potenza			
			l/min		GPM				HP		kW	
	bar	PSI	50 Hz	60 Hz	50 Hz	60 Hz	50 Hz	60 Hz	50 Hz	60 Hz	50 Hz	60 Hz
XXT4115HTI	150	2175	39.5	47.4	10.5	12.6	1450	1740	15.5	18.2	11.2	13.4
XXT5515HTI	150	2175	55,1	66,1	14,6	17,5	1450	1740	21,5	26,0	15,9	19,1
XXT7012HTI	120	1740	70,0	84,0	18,5	22,2	1450	1740	21,7	26,0	16,0	19,2

NESINPER | Distribucion y gestion tecnica Peru-Europa
Hidrolavadoras Nesinper S.A.C.
Deyvi Medrano Q. | Gestion tecnico-comercial
WhatsApp PE: +51 998 262 061 | dmedrano@nesinper.com

info@nesinper.com | www.nesinper.com

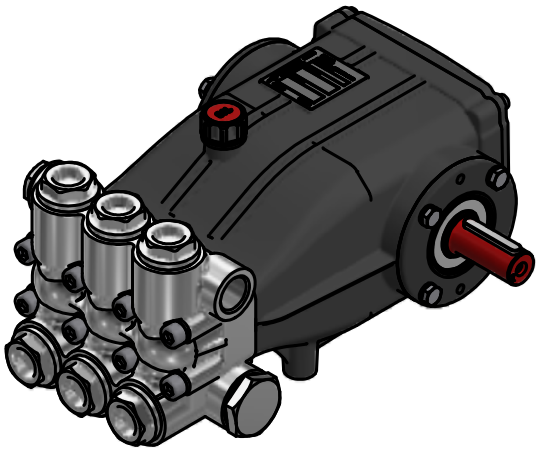

Dimensioni d'ingombro

Overall dimensions

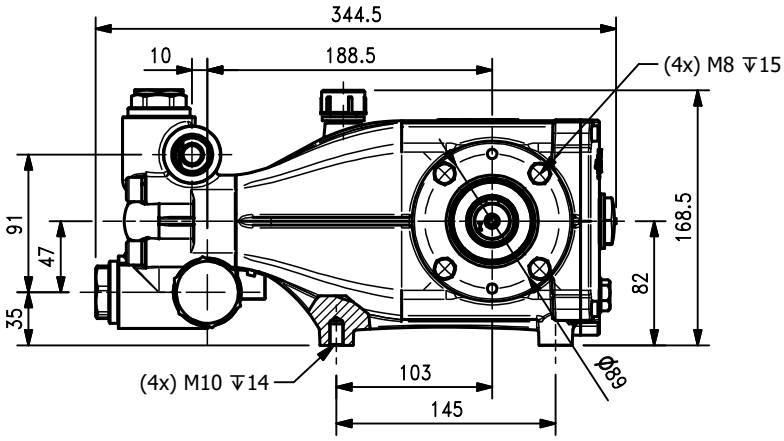

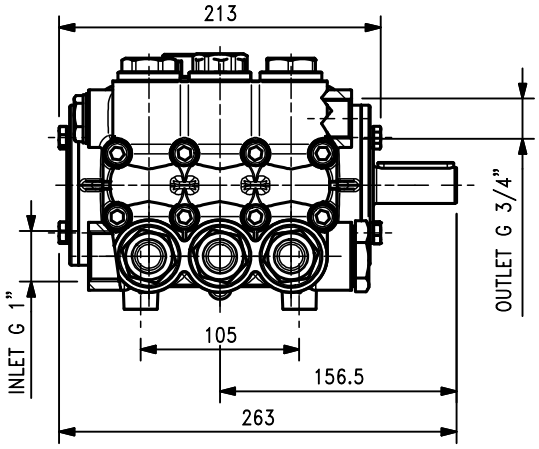

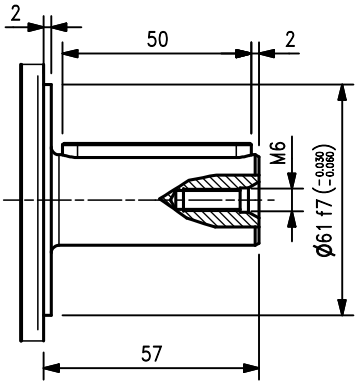

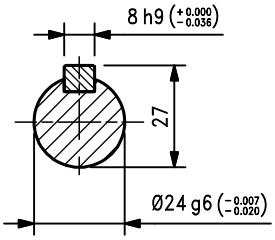

Lubrificazione: Olio SAE 10W-40
Capacità: 1.2 Litri
Peso pompa: 18.4 Kg

Rev. 13 09-2023

Lubrication: SAE 10W-40 Oil
Capacity: 1.2 Litres
Weight: 18.4 Kg

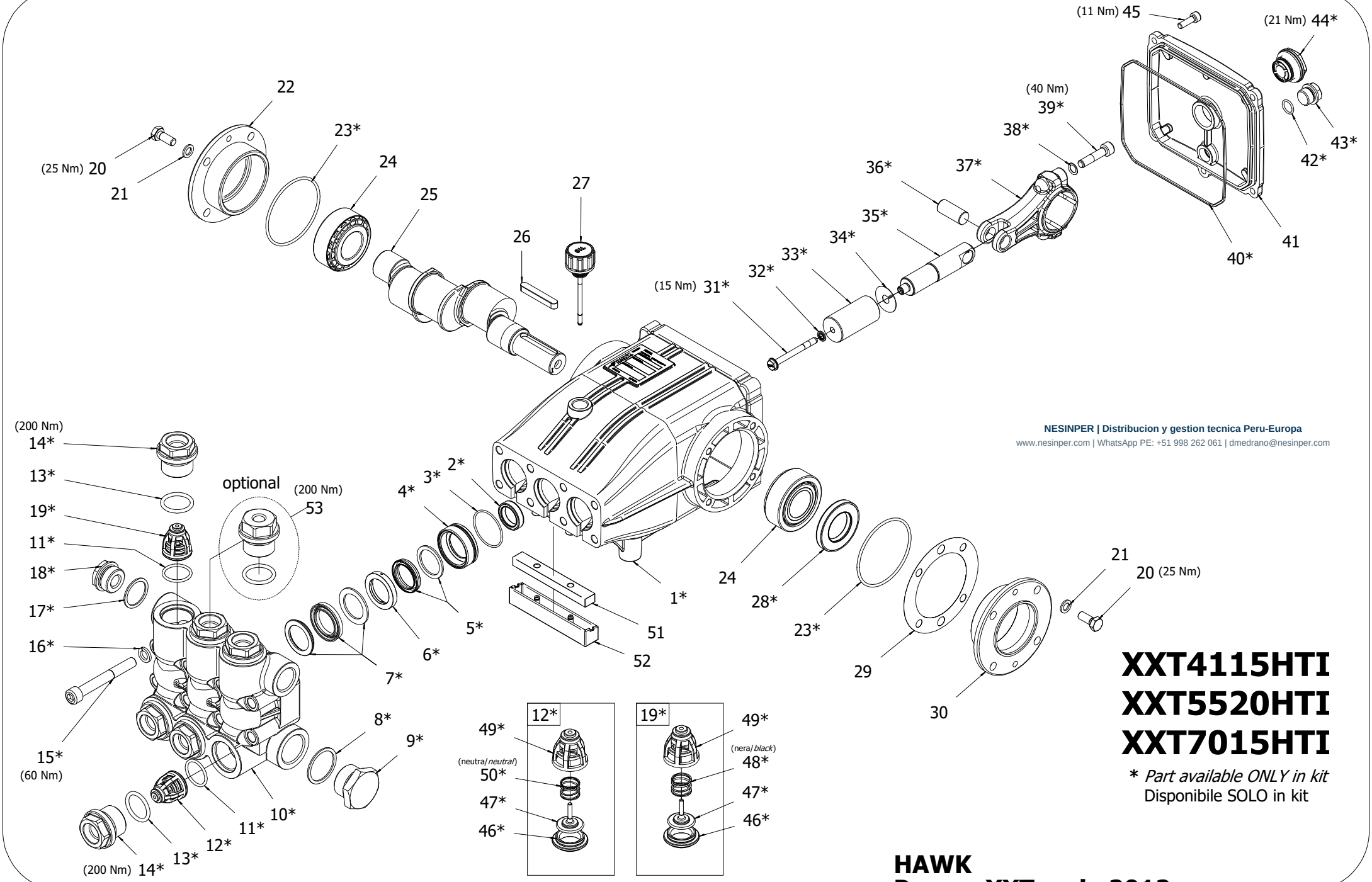

NESINPER | Distribucion y gestion tecnica Peru-Europa
www.nesinper.com | WhatsApp PE: +51 998 262 061 | dmedrano@nesinper.com

XXT4115HTI
XXT5520HTI
XXT7015HTI

* *Part available ONLY in kit*
Disponibile SOLO in kit

HAWK
Pompe XXT serie 2012
XXT pumps 2012 series

Rev. Rev. 13 09-2023

XXT HT I 2014 SERIES

ORDINARY MAINTENANCE KIT / KIT MANUTENZIONE ORDINARIA

KIT	*Item* Pos.	*Part Number* Codice	*Description*	Descrizione	*Q.TY by Pump* Q.TÀ per Pompa	*XXT7012HTI*	*XXT5515HTI*	*XXT4115HTI*
A	3- 5- 7	1.099-862.0	*PLUNGER SEALS DIA. 25 mm*	GUARNIZIONI PISTONE Ø25	1		•	•
		1.904-220.0	*PLUNGER SEALS DIA. 28 mm*	GUARNIZIONI PISTONE Ø28		•		
B	11- 12 (46- 47- 50- 49)- 13- 19 (46- 47-48-49)	1.905-594.0	*COMPLETE VALVE*	VALVOLA COMPLETA	1	•	•	•

EXTRAORDINARY MAINTENANCE KIT / KIT MANUTENZIONE STRAORDINARIA

KIT	*Item* Pos.	*Part Number* Codice	*Description*	Descrizione	*Q.TY by Pump* Q.TÀ per Pompa	*XXT7012HTI*	*XXT5515HTI*	*XXT4115HTI*
C	3- 4- 5- 6- 7	1.905-856.0	*COMPLETE SEALS PACKING DIA. 25 mm*	PACCO COMPLETO GUARNIZIONI PISTONE Ø25	1		•	•
		1.905-857.0	*COMPLETE SEALS PACKING DIA. 28 mm*	PACCO COMPLETO GUARNIZIONI PISTONE Ø28		•		
D	31- 32- 33- 34	1.099-777.0	*PLUNGER DIA. 25 mm*	PISTONE Ø25	3		•	•
		1.099-778.0	*PLUNGER DIA. 28 mm*	PISTONE Ø28		•		
E	2	1.905-545.0	*PLUNGER OIL SEALS*	ANELLI TENUTA OLIO ASTA	1	•	•	•
F	23- 28- 40- 42- 43- 44	1.905-613.0	*KIT CRANKCASE SEALS*	KIT TENUTE CARTER	1	•	•	•
G	3- 4- 5- 6- 7 8- 9- 10- 11 12 (46- 47- 50- 49)- 13- 14 15- 16- 17 18- 19 (46- 47-48-49)	1.904-434.0	*COMPLETE MANIFOLD 25*	TESTATA COMPLETA Ø25	1		•	•
		1.904-435.0	*COMPLETE MANIFOLD 28*	TESTATA COMPLETA Ø28		•		
H	31- 32- 35- 36- 37- 38- 39	1.904-182.0	*CONNECTING ROD PLUNGER ROD ASSY*	PREMONTATO ASTA-BIELLA PISTONE	3	•	•	•
I	13- 14	1.904-328.0	*VALVE PLUG ASSY*	PREMONTATO TAPPO VAM	6	•	•	•

"Q.TY by Pump" => Necessary quantity to repair one pump
"Q.TA' per Pompa" => Quantità necessaria per riparare una pompa

NESINPER | Distribucion y gestion tecnica Peru-Europa | www.nesinper.com | +51 998 262 061

OPTIONAL

Item Pos.	Part Number Codice	Description	Descrizione	Q.TY by Pump Q.TÀ per Pompa	XXT7012HTI	XXT5515HTI	XXT4115HTI
53	9.853-430.0	*THREADED BRASS PLUG G1/4*	PREMONTATO TAPPO FORATO	1	•	•	•

TOOL KIT

Part Number Codice	Description	Descrizione	Q.TY by Pump Q.TÀ per Pompa	XXT7012HTI	XXT5515HTI	XXT4115HTI
1.099-665.0	TOOL-KIT	TOOL-KIT	1			
1.904-248.0	TOOL-KIT XXT HT	TOOL-KIT XXT HT	1	•	•	•
1.905-659.0	OIL SEAL EXTRACTOR TOOL-KIT	TOOL-KIT ESTR. PARAOLIO	1			

IMPORTANT **IMPORTANTE**

* ***Part available ONLY in kit***
Disponibile SOLO in kit

(…) **Parts pre-assembled**
Parti pre-assemblate

NESINPER | Distribucion y gestion tecnica Peru-Europa | www.nesinper.com | +51 998 262 061

PARTS LIST LISTA PARTI

Item Pos	Part Number Codice	Description	Descrizione	KIT	Q.TY Q.TÀ	XXT7012HTI	XXT5515HTI	XXT4115HTI
1	9.850-377.0	CRANKCASE	CARTER		1			
2*		PLUNGER OIL SEAL	ANELLO RADIALE	E	3	•	•	•
3*		"O" RING Ø1.78X37.82	"O" RING Ø1.78X37.82	A-C-G	3			
4*		PRESSURE RING 25MM	PRESSORE "U" Ø25	C-G	3		•	•
		PRESSURE RING 28MM	PRESSORE "U" Ø28			•		
5*		LOW PRESSURE "U" SEAL, DIA.25MM	ANELLO TENUTA "U" Ø25	A-C-G	3		•	•
		LOW PRESSURE "U" SEAL, DIA.28MM	ANELLO TENUTA "U" Ø28			•		
6*		INTERMED. RING 25MM	DIFFUSORE INTER. Ø25	C-G	3		•	•
		INTERMED. RING 28MM	DIFFUSORE INTER. Ø28			•		
7*		HIGH PRESSURE "U" SEAL, DIA.25MM	ANELLO TENUTA "U" Ø25	A-C-G	3		•	•
		HIGH PRESSURE "U" SEAL, DIA.28MM	ANELLO TENUTA "U" Ø28			•		
8*		COPPER WASHER G1"	GUARNIZIONE RAME G1"	G	1			
9*		PLUG G1"	TAPPO G1"	G	1			
10*		MANIFOLD HOUSING 28/25	TESTATA Ø28/25	G	1			
11*		"O" RING Ø2.62X25.07	"O" RING Ø2.62X25.07	B-G	6			
12*		INLET VALVE	VALVOLA ASPIRAZIONE	B-G	3			
13*		"O" RING Ø2.62X26.58	"O" RING Ø2.62X26.58	B-G-I	6			
14*		VALVE PLUG	TAPPO VALVOLA	G-I	6			
15*		MANIFOLD SCREW M10X80 GEOMET	VITE M10X80 GEOMET	G	8			
16*		WASHER Ø10.2	ROSETTA Ø10.2	G	16	•	•	•
17*		COPPER WASHER G3/4	GUARNIZIONE RAME G3/4	G	1			
18*		PLUG G3/4	TAPPO G3/4	G-F	2			
19*		OUTLET VALVE	VALVOLA MANDATA	B-G	3			
20	9.851-503.0	HEXAGONAL SCREW M8X20	VITE M8X20		8			
21	9.851-114.0	WASHER Ø 8,5	ROSETTA PIANA Ø8,5		8			
22	9.850-624.0	CLOSED BEARING HOUSING	FLANGIA CHIUSA		1			
23*		"O" RING Ø1.78X71.12	"O" RING Ø1.78X71.12	F	2			
24	9.850-348.0	ROLLER BEARING	CUSCINETTO A RULLI		2			
25	9.850-195.0	CRANKSHAFT Ø24	ALBERO ECCENTRICO Ø24		1	•	•	
	9.850-193.0	"	"					•
26	9.850-447.0	CRANKSHAFT KEY	CHIAVETTA		1			
27	9.851-287.0	OIL DIP STICK	TAPPO LIVELLO OLIO		1			
28*		CRANKSHAFT SEAL	ANELLO RADIALE	F	1	•	•	•
29	9.850-546.0	SHIM	DISTANZIALE		1			
30	9.850-597.0	BEARING HOUSING	FLANGIA		1			
31*		PLUNGER SCEW	VITE PISTONE	D-H	3			

NESINPER | Distribucion y gestion tecnica Peru-Europa | www.nesinper.com | +51 998 262 061

Item Pos	Part Number Codice	Description	Descrizione	KIT	Q.TY Q.TÀ	XXT7012HTI	XXT5515HTI	XXT4115HTI
32*		BONDED SEAL	BONDED SEAL	D-H	3	•	•	•
33*		PLUNGER 25MM	PISTONE Ø25	D	3		•	•
		PLUNGER 28MM	PISTONE Ø28			•		
34*		COPPER SPACER	ROSETTA RAME	D	3			
35*		PLUNGER ROD	ASTA PISTONE	H	3			
36*		CONNECTING ROD PIN	SPINOTTO	H	3			
37*		CONNECTING ROD	BIELLA	H	3			
38*		SPRING WASHER Ø6	ROSETTA ELASTICA Ø6	H	6			
39*		CONNECTING ROD SCREW M6X30	VITE M6X30	H	6			
40*		"O" RING Ø 2.62X152.07	"O" RING Ø 2.62X152.07	F	1			
41	9.850-389.0	CRANKCASE COVER	COPERCHIO POSTERIORE		1			
42*		"O" RING Ø1.78X14	"O" RING Ø1.78X14	F	1			
43*		BRASS PLUG G3/8	TAPPO OTTONE G3/8		1	•	•	•
44*		SIGHT GLASS, G3/4	SPIA LIVELLO OLIO G3/4	F	1			
45	9.851-474.0	SCREW M6X16	VITE M6X16		4			
46*		VALVE SEAT	SEDE VALVOLA	B-G	6			
47*		VALVE PLATE	PIATTELLO VALVOLA	B-G	6			
48*		VALVE SPRING	MOLLA VALVOLA	B-G	3			
49*		VALVE CAGE	GABBIA VALVOLA	B-G	6			
50*		VALVE SPRING	MOLLA VALVOLA	B-G	3			
51	9.851-277.0	POLYESTER FIBER SPONGE	SPUGNA POLIESTERE		1			
52	9.851-443.0	DRAINAGE TANK	VASCHETTA		1			

NESINPER | Soporte tecnico y comercial

Hidrolavadoras Nesinper S.A.C.

Deyvi Medrano Q. | Gestion tecnico-comercial | dmedrano@nesinper.com

WhatsApp PE: +51 998 262 061

info@nesinper.com | www.nesinper.com

Gestion tecnica Peru-Europa